WOLLONGONG CITY COUNCIL

wollongong
city of innovation

ENGINEERING STANDARD DRAWINGS

TABLE OF CONTENTS

DRAINAGE STRUCTURES

C01 STANDARD GULLY PIT - BARRIER KERB
C02 STANDARD GULLY PIT - ROLL KERB
C03 STANDARD INSPECTION PIT
C04 LETTERBOX AND GRATED INLET PIT
C05 STEP IRONS FOR PITS
C06 HOUSE DRAIN CONNECTIONS
C07 SUBSOIL DRAINAGE

ROADS AND KERBS

C10 STANDARD KERB PROFILES
C11 STANDARD KERB RAMPS
C12 STANDARD DISH CROSSING
C13 SUBSOIL DRAINAGE INSTALLATION
C14 SERVICE TRENCHES IN ROAD AND KERB RECONSTRUCTION

CONCRETE

C19 TYPICAL JOINTING DETAILS
C20 TYPICAL JOINTING DETAILS

CONCRETE (CONTINUED)

C21 TYPICAL FOOTWAY PAVEMENT DETAILS SHEET 1
C22 TYPICAL FOOTWAY PAVEMENT DETAILS SHEET 2
C23 TYPICAL VEHICULAR CROSSING AND PEDESTRIAN RAMP DETAILS
C24 TYPICAL CROSSING DETAILS
C25 TYPICAL SERVICES LIDS IN FOOTWAYS DETAILS
C26 TYPICAL CROSSING DETAILS - WATERFRONT

ACCESS DRIVEWAYS

C30 VEHICULAR CROSSING - RESIDENTIAL TYPE BARRIER KERB
C31 VEHICULAR CROSSING - RESIDENTIAL TYPE ROLL KERB & MIN DRIVEWAY DIMENSIONS
C32 VEHICULAR CROSSING - INDUSTRIAL TYPE
C33 MAX INTERNAL GRADING - DOMESTIC DWELLINGS
C34 MAX INTERNAL GRADING - UNITS & COMMERCIAL DEVELOPMENTS

TREES ON DEVELOPMENT SITES

LD01 TREE PROTECTION DETAILS
LD02 TYPICAL FOOTPATH UNDER TREES SURFACE DETAILS

ISSUE	DESCRIPTION	DRAWN	APPR'D	DATE
A	ISSUED FOR INFORMATION	J.M.	L.D.	12/19

DATUM AHD | SURVEYOR
AZIMUTH MGA | FIELD BOOK
RELATED PLANS
SCALE AS NOTED

DRAWN J. MILES DATE 12/19
DESIGNED L. DEAN DATE 12/19
CHECKED L. DEAN DATE 12/19

APPROVED (FOR COUNCIL USE ONLY)
SENIOR DESIGN ENGINEER - CIVIL
L. DEAN
DATE 12/19

bsi. ISO 9001 Quality Management

NORTH POINT

CITY OF WOLLONGONG
ENGINEERING STANDARD DRAWINGS
TITLE PAGE

wollongong city of innovation
DESIGN & TECHNICAL SERVICES
Ph. 02 42277111

PJ or TR No. TR-452
SHEET OF SHEETS
DRAWING No. 7000
SHEET No. C00
A3 ORIGINAL
ISSUE A

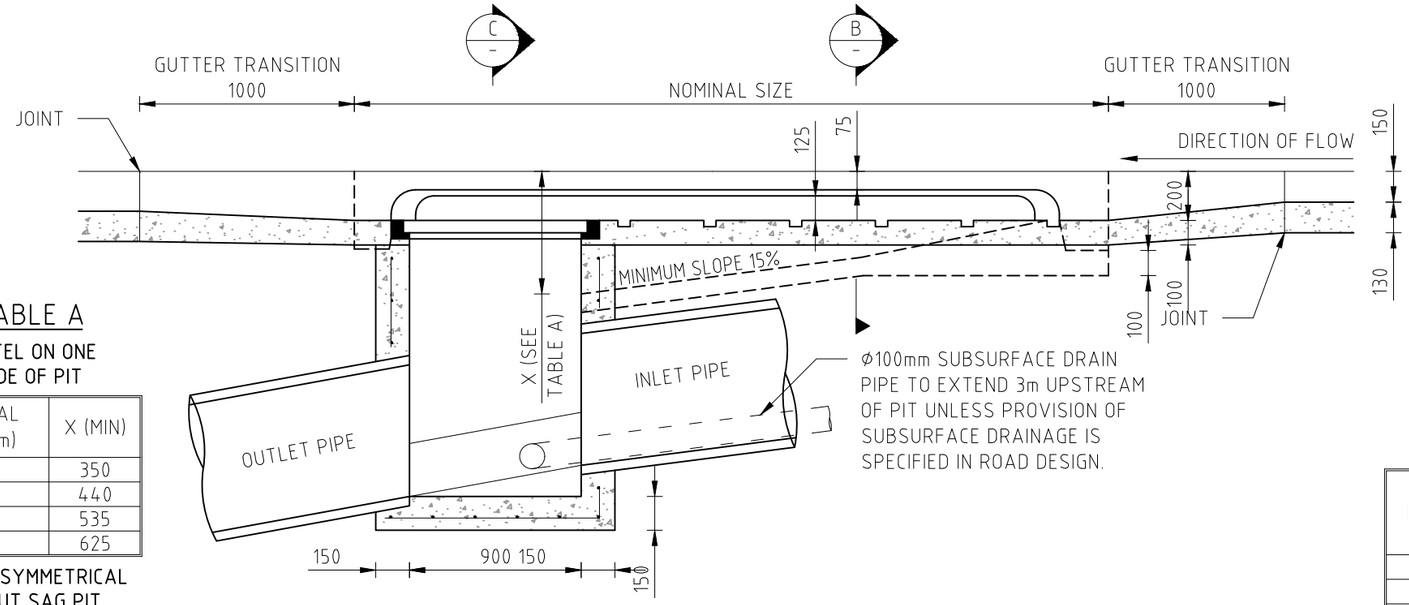

TABLE A

LINTEL ON ONE SIDE OF PIT

NOMINAL SIZE (m)	X (MIN)
1.8	350
2.4	440
3.0	535
3.6	625

LINTEL SYMMETRICAL ABOUT SAG PIT

NOMINAL SIZE (m)	X (MIN)
1.8	270
2.4	310
3.0	360
3.6	405

SECTION A -

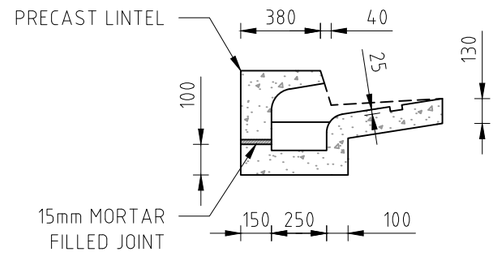

SECTION B -

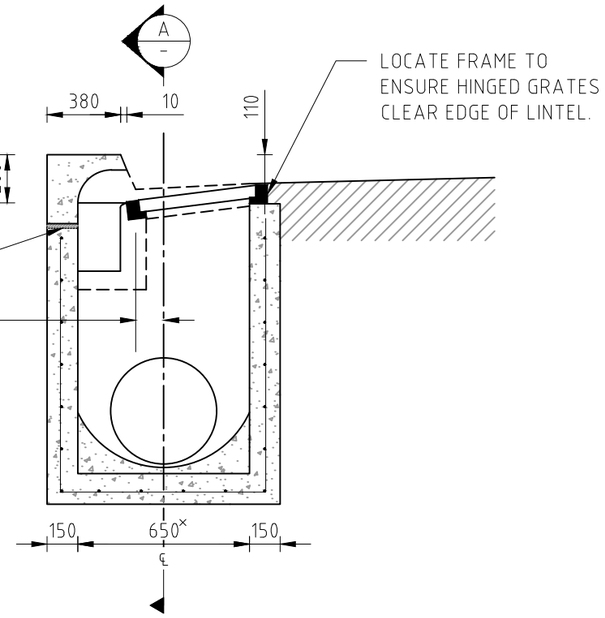

SECTION C -

PIPE SIZE	℄ PIPE TO INV. GUTTER
675	170
750	230
825	260
900	330
1050	425
1200	500
1350	580
1500	700
1650	775
1800	865

× WIDTH MAY VARY ACCORDING TO TYPE OF GRATE USED

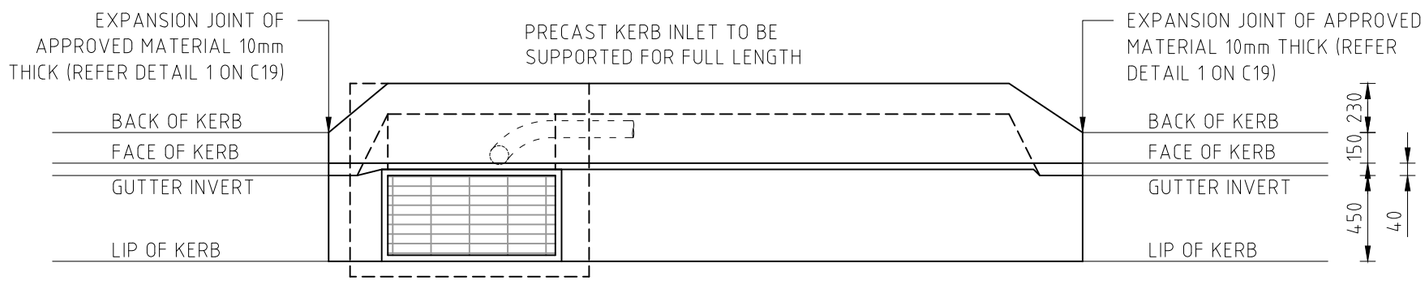

PLAN

NOTES:

1. ALL PITS TO BE CONSTRUCTED WITH 25MPa CONCRETE AND REINFORCED WITH SL72 MESH CENTRALLY PLACED. MINIMUM COVER TO REINFORCEMENT AT PIPE PENETRATIONS ETC 50mm.
2. MAXIMUM PIPE SIZES Ø525mm AND MAXIMUM DEPTH 1800mm. SPECIAL DESIGN REQUIRED FOR LARGER PITS.
3. TO BE USED IN RESIDENTIAL STREETS ONLY. SPECIAL DESIGN REQUIRED FOR ARTERIAL ROADS, COLLECTOR ROADS AND INDUSTRIAL AREAS BY SUITABLY QUALIFIED STRUCTURAL ENGINEER.
4. GRATE AND FRAME TO BE CLASS D HOT DIP GALVANISED MILD STEEL - WELDLOK GG50D OR SIMILAR EQUIVALENT. ENSURE GRATING PATTERN IS A BICYCLE SAFE DESIGN.
5. ALL FRAMES TO BE EMBEDDED INTO SURROUNDING CONCRETE AND FINISHED FLUSH WITH THE FINISHED SURFACE LEVELS.
6. STEP IRONS TO BE USED WHERE DEPTH TO INVERT IS GREATER THAN 1.2m (REFER STANDARD DRAWING 7000_C05).
7. ALL EXPOSED EDGES TO BE ROUNDED TO 10mm RADIUS.
8. N12 'L' BARS (MINIMUM 400x400mm) TO BE PLACED AT 400mm CENTRES ON ALL CORNERS (I.E. WALLS AND BASE).
9. ALL DIMENSIONS ARE IN MILLIMETRES UNLESS OTHERWISE SHOWN

ISSUE	DESCRIPTION	DRAWN	APPR'D	DATE
A	ISSUED FOR INFORMATION	J.M.	L.D.	12/19

DATUM AHD | SURVEYOR | AZIMUTH MGA | FIELD BOOK | RELATED PLANS | SCALE AS NOTED

DRAWN J. MILES DATE 12/19
DESIGNED L. DEAN DATE 12/19
CHECKED L. DEAN DATE 12/19

APPROVED (FOR COUNCIL USE ONLY)
SENIOR DESIGN ENGINEER - CIVIL
L. DEAN
DATE 12/19

NORTH POINT

CITY OF WOLLONGONG

ENGINEERING STANDARD DRAWING
STANDARD GULLY PIT
UP TO 1.8m DEEP
FOR BARRIER KERB AND GUTTER

wollongong city of innovation
DESIGN & TECHNICAL SERVICES
Ph. 02 42277111

PJ or TR No. TR-452
SHEET OF SHEETS
A3 ORIGINAL
DRAWING No. 7000
SHEET No. C01
ISSUE A

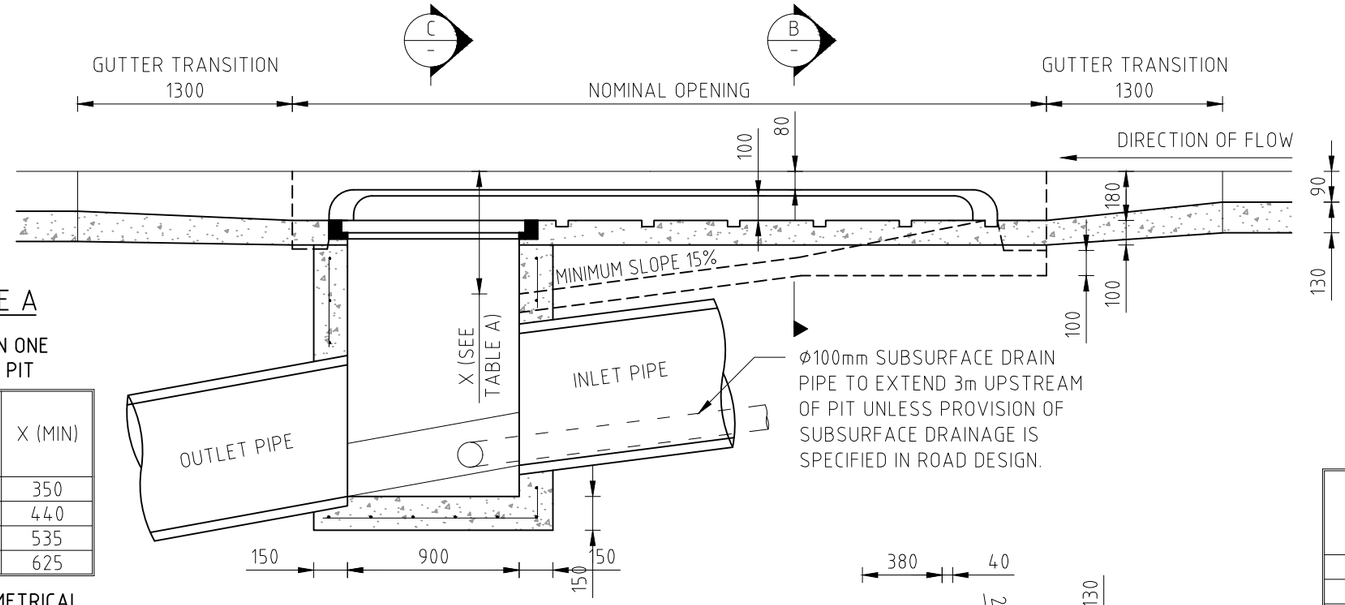

SECTION A -

TABLE A

LINTEL ON ONE SIDE OF PIT

NOMINAL SIZE (m)	X (MIN)
1.8	350
2.4	440
3.0	535
3.6	625

LINTEL SYMMETRICAL ABOUT SAG PIT

NOMINAL SIZE (m)	X (MIN)
1.8	270
2.4	310
3.0	360
3.6	405

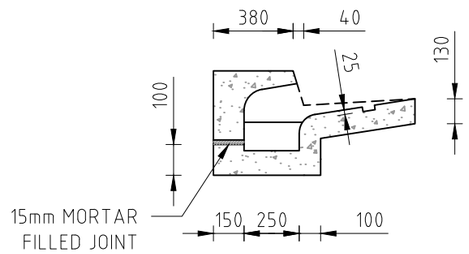

SECTION B -

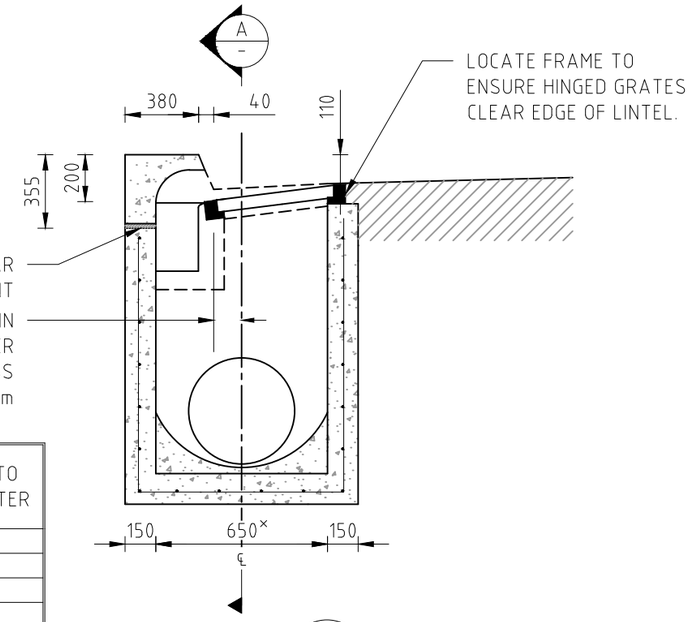

SECTION C -

PIPE SIZE	℄ PIPE TO INV. GUTTER
675	170
750	230
825	260
900	330
1050	425
1200	500
1350	580
1500	700
1650	775
1800	865

× WIDTH MAY VARY ACCORDING TO TYPE OF GRATE USED

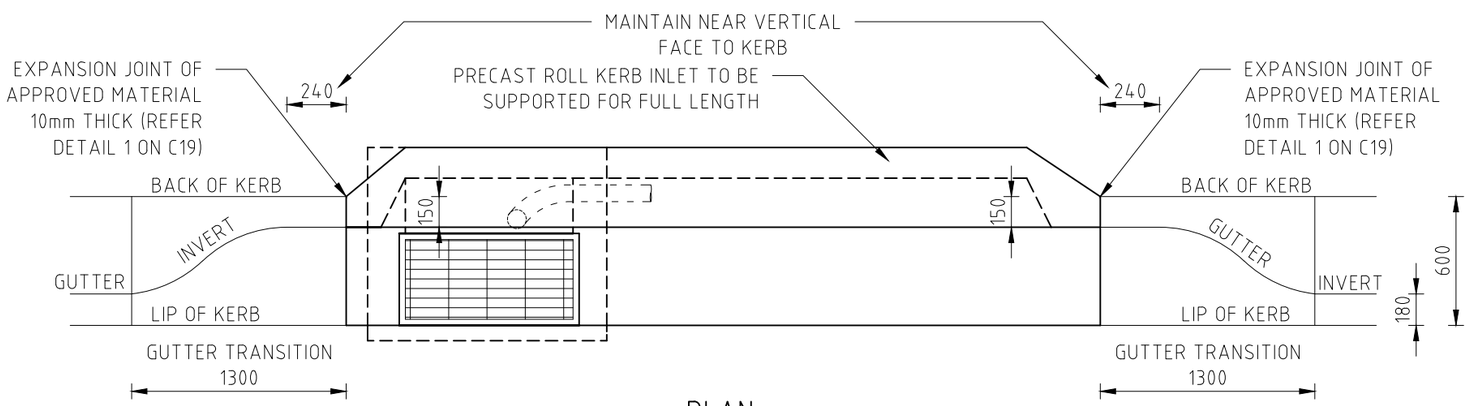

PLAN

NOTES:

1. ROLL KERB AND GUTTER IS NOT TO BE USED FOR NEW INSTALLATIONS. IT IS INCLUDED IN THESE DRAWINGS FOR MAINTENANCE PURPOSES ONLY.
2. ALL PITS TO BE CONSTRUCTED WITH 25MPa CONCRETE AND REINFORCED WITH SL72 MESH CENTRALLY PLACED. MINIMUM COVER TO REINFORCEMENT AT PIPE PENETRATIONS ETC 50mm.
3. MAXIMUM PIPE SIZES Ø525mm AND MAXIMUM DEPTH 1800mm. SPECIAL DESIGN REQUIRED FOR LARGER PITS.
4. TO BE USED IN RESIDENTIAL STREETS ONLY. SPECIAL DESIGN REQUIRED FOR ARTERIAL ROADS, COLLECTOR ROADS AND INDUSTRIAL AREAS.
5. GRATE AND FRAME TO BE CLASS D HOT DIP GALVANISED MILD STEEL - WELDLOK GG50D OR SIMILAR EQUIVALENT.
6. ALL FRAMES TO BE EMBEDDED INTO SURROUNDING CONCRETE AND FINISHED FLUSH WITH THE FINISHED SURFACE LEVELS.
7. STEP IRONS TO BE USED WHERE DEPTH TO INVERT IS GREATER THAN 1.2m (REFER STANDARD DRAWING 7000_C05).
8. ALL EXPOSED EDGES TO BE ROUNDED TO 10mm RADIUS.
9. N12 'L' BARS (MINIMUM 400x400mm) TO BE PLACED AT 400mm CENTRES ON ALL CORNERS (I.E. WALLS AND BASE).
10. ALL DIMENSIONS ARE IN MILLIMETRES UNLESS OTHERWISE SHOWN

ISSUE	DESCRIPTION	DRAWN	APPR'D	DATE
A	ISSUED FOR INFORMATION	J.M.	L.D.	12/19

DATUM AHD | SURVEYOR | AZIMUTH MGA | FIELD BOOK | RELATED PLANS | SCALE AS NOTED

DRAWN J. MILES DATE 12/19
DESIGNED L. DEAN DATE 12/19
CHECKED L. DEAN DATE 12/19

APPROVED (FOR COUNCIL USE ONLY)
SENIOR DESIGN ENGINEER - CIVIL
L. DEAN
DATE 12/19

NORTH POINT

CITY OF WOLLONGONG

ENGINEERING STANDARD DRAWING
STANDARD GULLY PIT
UP TO 1.8m DEEP
FOR ROLL KERB AND GUTTER

wollongong city of innovation
DESIGN & TECHNICAL SERVICES
Ph. 02 42277111

PJ or TR No. TR-452
SHEET OF SHEETS
DRAWING No. 7000
SHEET No. C02
A3 ORIGINAL
ISSUE A

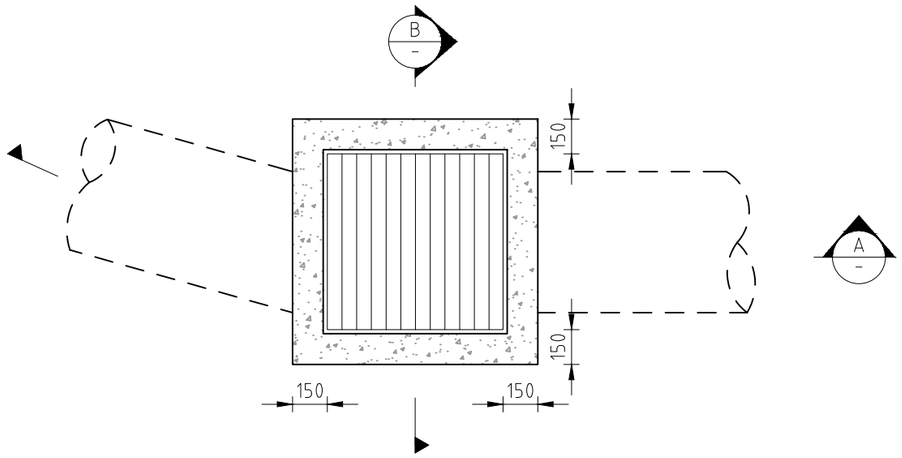

PLAN

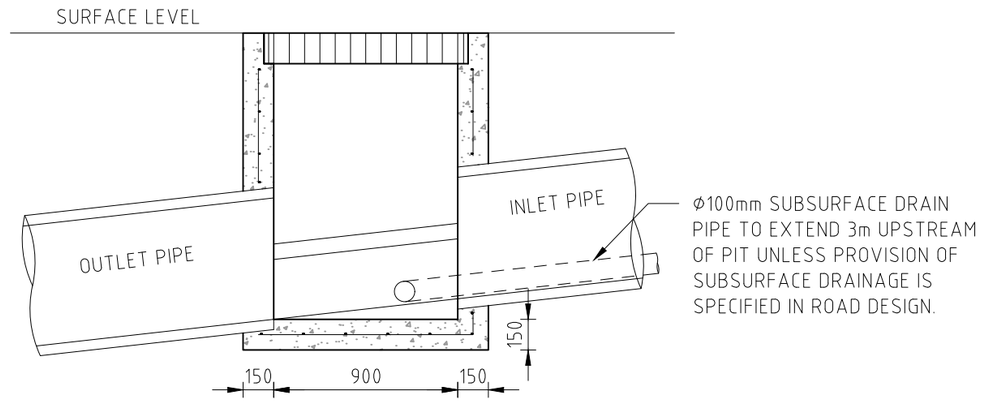

SECTION A -

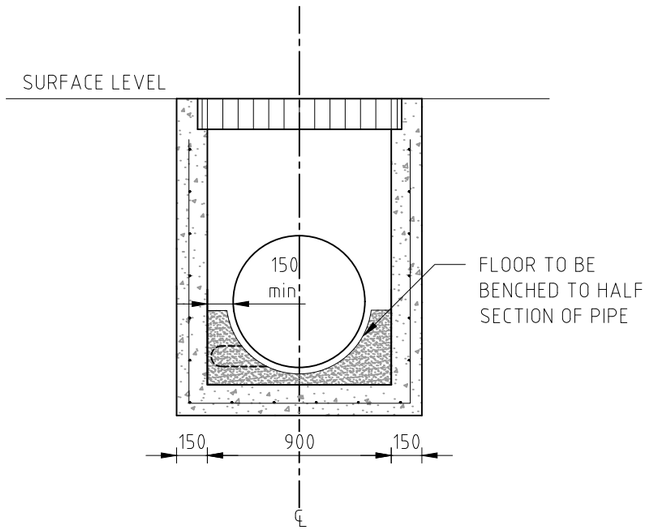

SECTION B -

NOTES:

1. ALL PITS TO BE CONSTRUCTED WITH 25MPa CONCRETE AND REINFORCED WITH SL72 MESH CENTRALLY PLACED. MINIMUM COVER TO REINFORCEMENT AT PIPE PENETRATIONS ETC 50mm.
2. MAXIMUM PIPE SIZES Ø525mm AND MAXIMUM DEPTH 1800mm. SPECIAL DESIGN REQUIRED FOR LARGER PITS.
3. TO BE USED IN RESIDENTIAL STREETS ONLY. SPECIAL DESIGN REQUIRED FOR ARTERIAL ROADS, COLLECTOR ROADS AND INDUSTRIAL AREAS.
4. GRATE AND FRAME TO BE CLASS D HOT DIP GALVANISED MILD STEEL WITH GRATE TO BE LOCKABLE.
5. ALL FRAMES TO BE EMBEDDED INTO SURROUNDING CONCRETE AND FINISHED FLUSH WITH THE FINISHED SURFACE LEVELS.
6. STEP IRONS TO BE USED WHERE DEPTH TO INVERT IS GREATER THAN 1.2m (REFER STANDARD DRAWING 7000_C05).
7. ALL EXPOSED EDGES TO BE ROUNDED TO 10mm RADIUS.
8. N12 'L' BARS (MINIMUM 400x400mm) TO BE PLACED AT 400mm CENTRES ON ALL CORNERS (I.E. WALLS AND BASE).
9. ALL DIMENSIONS ARE IN MILLIMETRES UNLESS OTHERWISE SHOWN

ISSUE	DESCRIPTION	DRAWN	APPR'D	DATE
A	ISSUED FOR INFORMATION	J.M.	L.D.	12/19

DATUM AHD | SURVEYOR | AZIMUTH MGA | FIELD BOOK | RELATED PLANS | SCALE AS NOTED

DRAWN J. MILES DATE 12/19
DESIGNED L. DEAN DATE 12/19
CHECKED L. DEAN DATE 12/19

APPROVED (FOR COUNCIL USE ONLY)
SENIOR DESIGN ENGINEER - CIVIL
L. DEAN
DATE 12/19

NORTH POINT

CITY OF WOLLONGONG

ENGINEERING STANDARD DRAWING
STANDARD INSPECTION PIT
FOR PIPES UP TO 750mm

wollongong city of innovation
DESIGN & TECHNICAL SERVICES
Ph. 02 42277111

PJ or TR No. TR-452
SHEET OF SHEETS
DRAWING No. 7000
SHEET No. C03
A3 ORIGINAL
ISSUE A

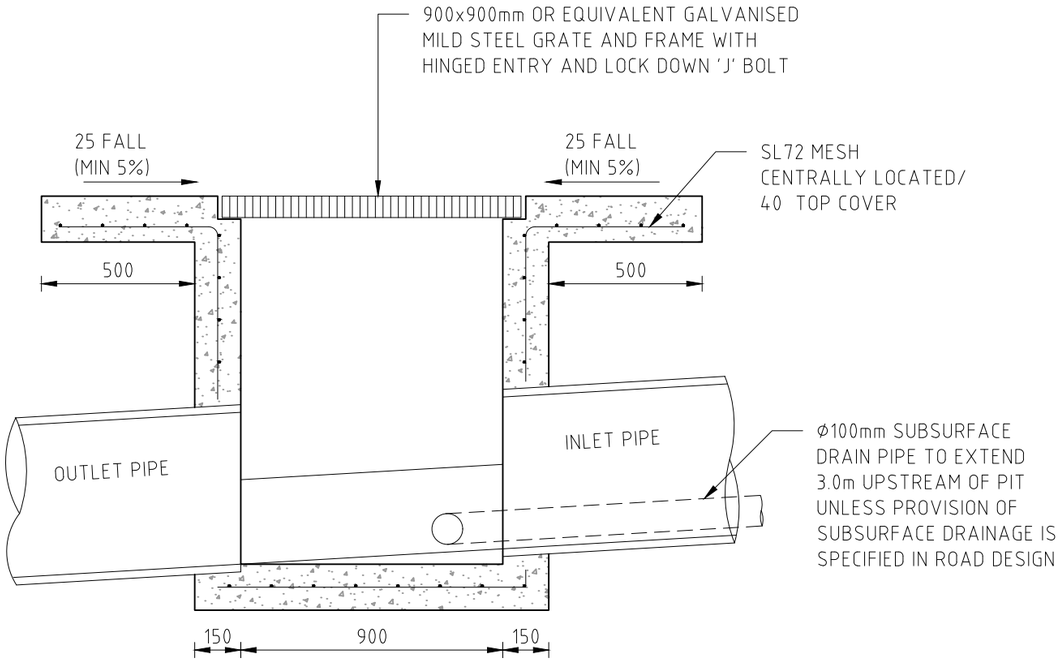

GRATED INLET PIT SECTION (A / -)

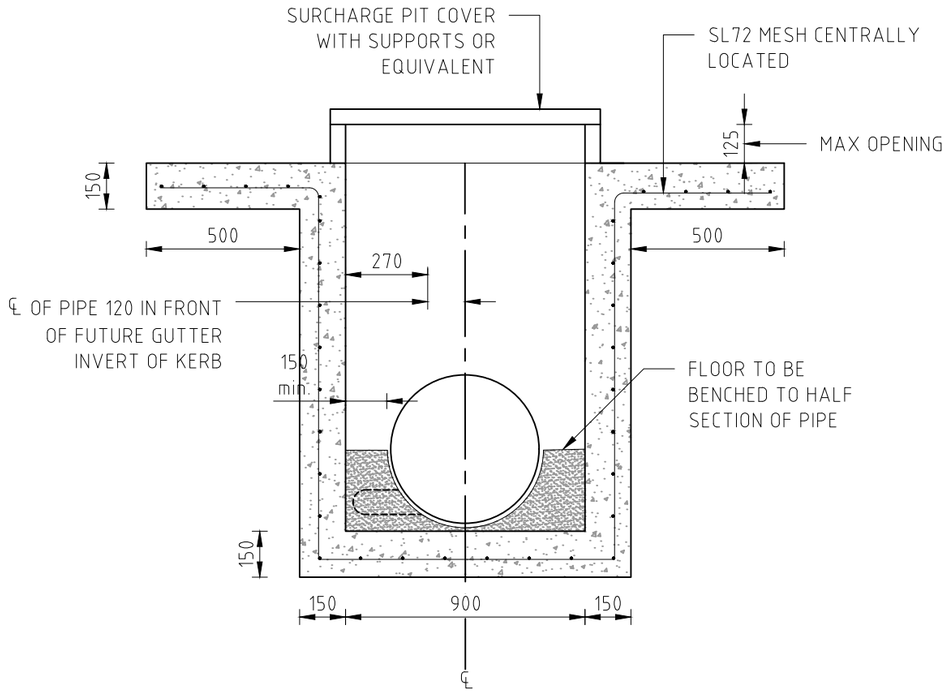

LETTERBOX INLET PIT SECTION (B / -)

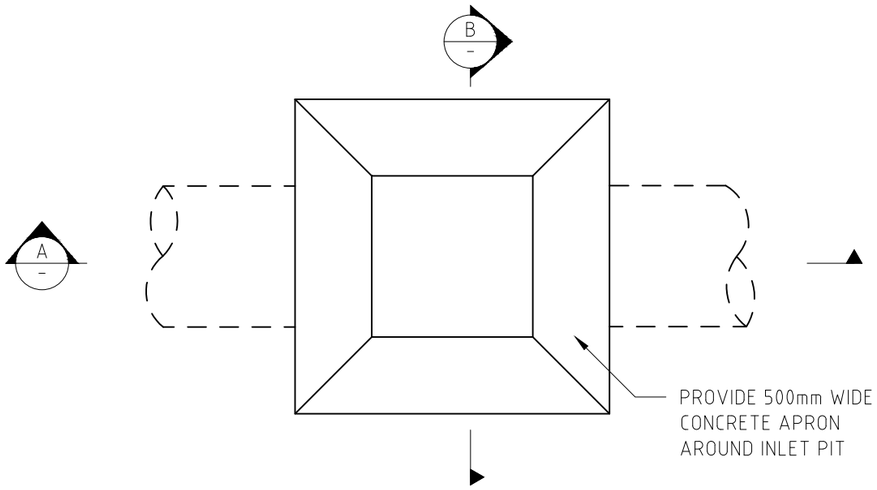

SURFACE INLET PIT PLAN

NOTE: GRATING OMITTED

NOTES:

1. ALL PITS TO BE CONSTRUCTED WITH 25MPa CONCRETE AND REINFORCED WITH SL72 MESH CENTRALLY PLACED. MIN COVER TO REINFORCEMENT AT PIPE PENETRATIONS ETC 50mm.
2. MAXIMUM PIPE SIZES Ø525mm AND MAXIMUM DEPTH 1800mm. SPECIAL DESIGN REQUIRED FOR LARGER PITS.
3. TO BE USED IN RESIDENTIAL STREETS ONLY. SPECIAL DESIGN REQUIRED FOR ARTERIAL ROADS, COLLECTOR ROADS AND INDUSTRIAL AREAS.
4. GRATE AND FRAME TO BE CLASS D HOT DIP GALVANISED MILD STEEL WITH GRATE TO BE LOCKABLE.
5. ALL FRAMES TO BE EMBEDDED INTO SURROUNDING CONCRETE AND FINISHED FLUSH WITH THE FINISHED SURFACE LEVELS.
6. STEP IRONS TO BE USED WHERE DEPTH TO INVERT IS GREATER THAN 1.2m (REFER STANDARD DRAWING 7000_C05).
7. ALL EXPOSED EDGES TO BE ROUNDED TO 10mm RADIUS.
8. N12 'L' BARS (MINIMUM 400x400mm) TO BE PLACED AT 400mm CENTRES ON ALL CORNERS (I.E. WALLS AND BASE).
9. ALL DIMENSIONS ARE IN MILLIMETRES UNLESS OTHERWISE SHOWN

ISSUE	DESCRIPTION	DRAWN	APPR'D	DATE
A	ISSUED FOR INFORMATION	J.M.	L.D.	12/19

DATUM AHD | SURVEYOR | AZIMUTH MGA | FIELD BOOK | RELATED PLANS | SCALE AS NOTED

DRAWN J. MILES DATE 12/19
DESIGNED L. DEAN DATE 12/19
CHECKED L. DEAN DATE 12/19

APPROVED (FOR COUNCIL USE ONLY)
SENIOR DESIGN ENGINEER - CIVIL
L. DEAN
DATE 12/19

NORTH POINT

CITY OF WOLLONGONG

ENGINEERING STANDARD DRAWING
LETTERBOX AND GRATED INLET PIT
FOR PIPES UP TO 750mm

wollongong city of innovation
DESIGN & TECHNICAL SERVICES
Ph. 02 42277111

PJ or TR No. TR-452
SHEET OF SHEETS
DRAWING No. 7000
SHEET No. C04
A3 ORIGINAL
ISSUE A

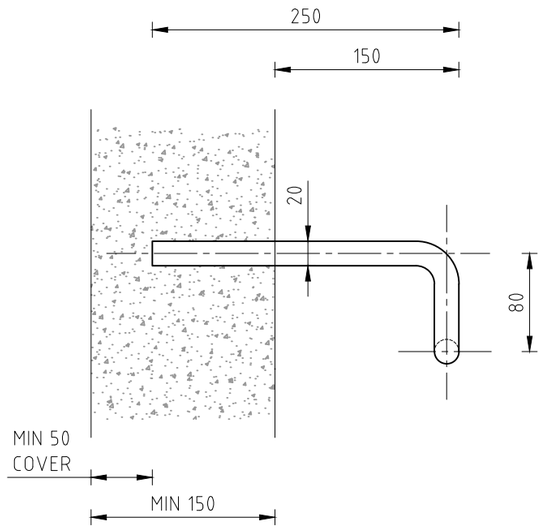

SIDE ELEVATION

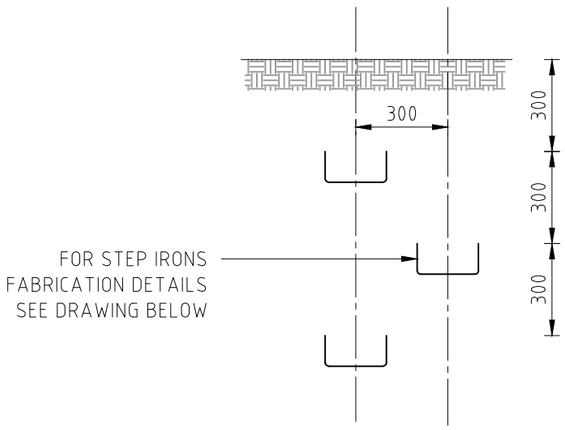

STEP IRON PLACEMENT DIAGRAM

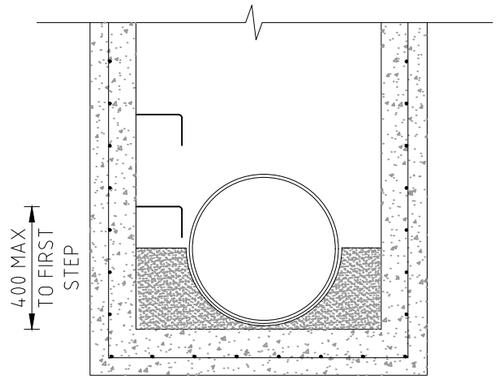

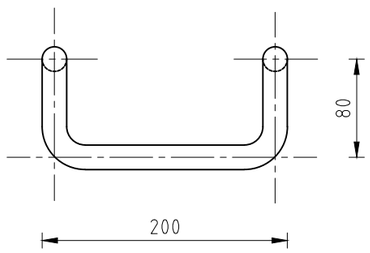

FRONT ELEVATION

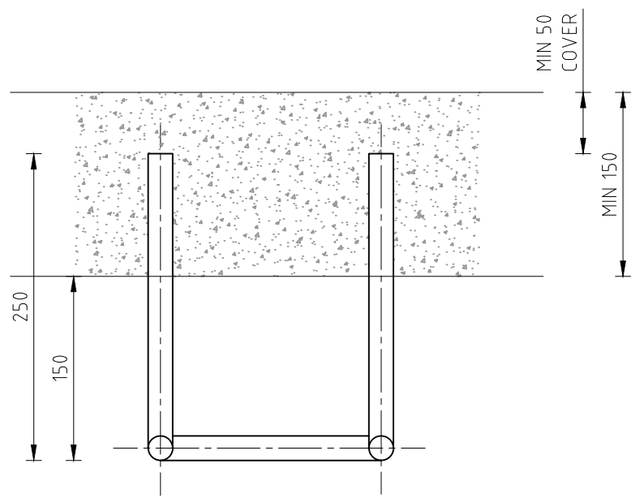

PLAN

NOTES:

1. STEP IRONS TO BE USED WHERE DEPTH OF PIT EXCEEDS 1.2m
2. STEP IRONS TO BE FABRICATED FROM ⌀20mm MILD STEEL AND HOT DIP GALVANISED - ALL BENDS TO BE FORMED AROUND ⌀12mm PIN.
3. PROPRIETARY PLASTIC ENCAPSULATED HEAVY DUTY GRADE STEP IRONS ARE ALSO DEEMED SUITABLE.
4. INSTALLATION OF STEP IRONS TO BE IN ACCORDANCE WITH AS 1657
5. STEP IRONS MUST BE LOCATED:
   - 5.1. DIRECTLY BELOW OPENING OF COVER
   - 5.2. DESIRABLY ON A WALL WITH NO PIPE OPENING
   - 5.3. ON ONE OF THE LONG SIDES OF THE PIT
6. ALL DIMENSIONS ARE IN MILLIMETRES UNLESS OTHERWISE SHOWN

ISSUE	DESCRIPTION	DRAWN	APPR'D	DATE
A	ISSUED FOR INFORMATION	J.M.	L.D.	12/19

DATUM AHD | SURVEYOR | AZIMUTH MGA | FIELD BOOK | RELATED PLANS | SCALE AS NOTED

DRAWN J. MILES DATE 12/19
DESIGNED L. DEAN DATE 12/19
CHECKED L. DEAN DATE 12/19

APPROVED (FOR COUNCIL USE ONLY)
SENIOR DESIGN ENGINEER - CIVIL
L. DEAN
DATE 12/19

NORTH POINT

CITY OF WOLLONGONG

ENGINEERING STANDARD DRAWING
STEP IRONS FOR PITS

wollongong city of innovation
DESIGN & TECHNICAL SERVICES
Ph. 02 42277111

PJ or TR No. TR-452
SHEET OF SHEETS
DRAWING No. 7000
SHEET No. C05
ISSUE A
A3 ORIGINAL

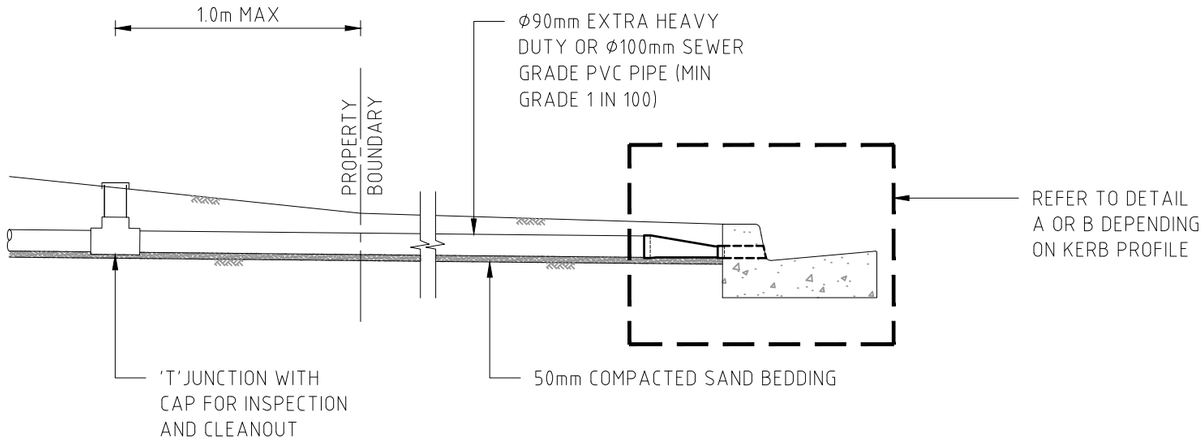

CONNECTION TO KERB SECTIONAL ELEVATION

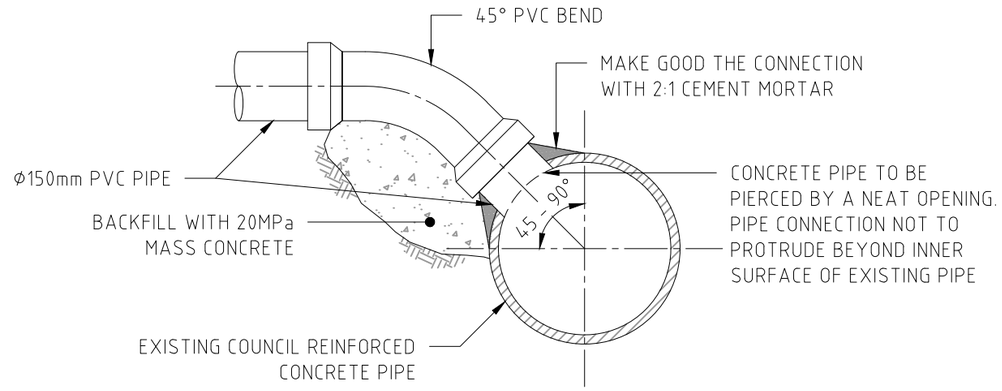

TYPICAL CONNECTION TO COUNCIL'S EXISTING DRAINAGE LINE
(Ø150mm PIPE CONNECTION)

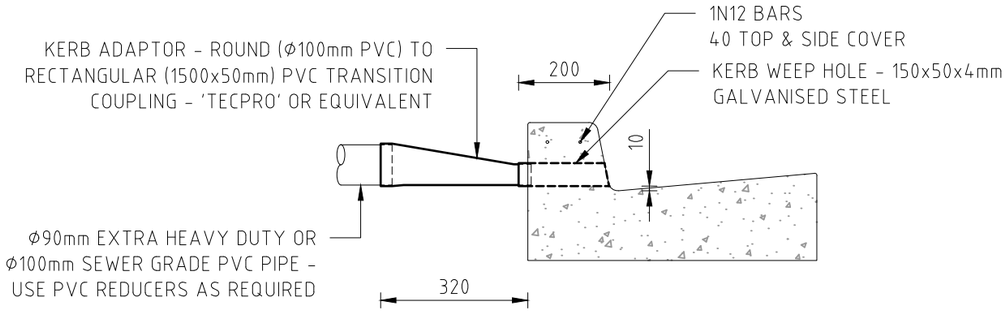

DETAIL 1 - KERB ADAPTOR
150mm BARRIER KERB & GUTTER

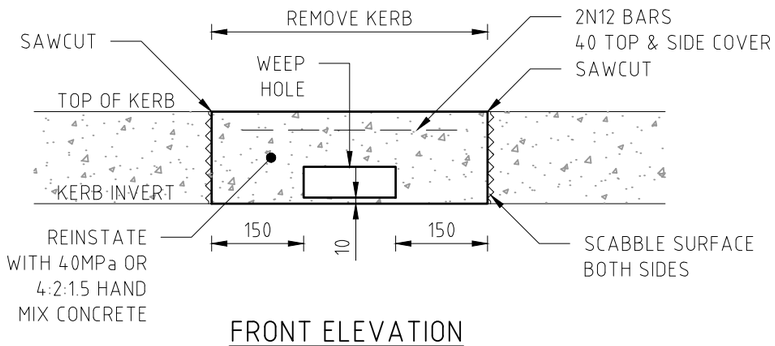

FRONT ELEVATION
(BARRIER KERB & GUTTER)

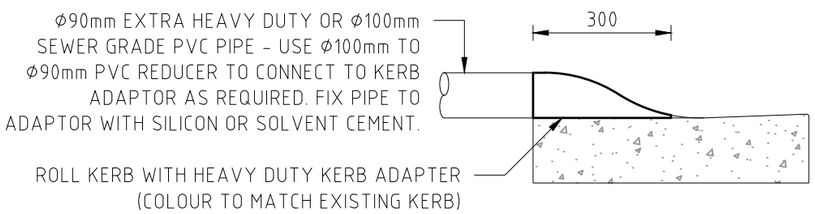

DETAIL 2 - KERB ADAPTOR
110mm LOW PROFILE ROLL KERB & GUTTER

ROLL KERB AND GUTTER IS NOT TO BE USED FOR NEW INSTALLATIONS. IT IS INCLUDED IN THESE DRAWINGS TO DEMONSTRATE HOUSE DRAIN CONNECTION REQUIREMENTS FOR EXISTING ROLL KERB AND GUTTER INSTALLATIONS.

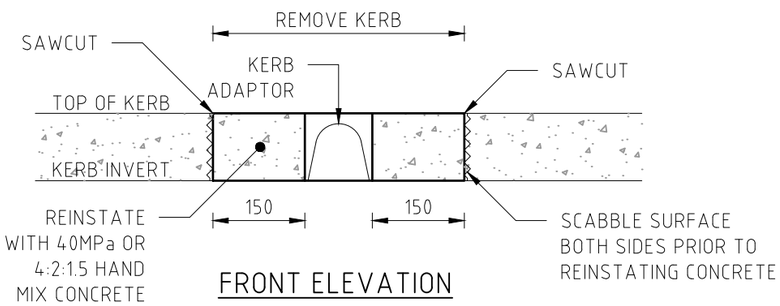

FRONT ELEVATION
(ROLL KERB & GUTTER)

TYPICAL CONNECTION TO KERB AND GUTTER

NOTES:

1. MULTIPLE OUTLETS TO BE PLACED WITH 300mm MINIMUM CLEAR SEPARATION BETWEEN EACH OUTLET
2. FOR NEW DEVELOPMENTS SEAL INLET TO ADAPTOR
3. ALL DIMENSIONS IN MILLIMETRES UNLESS OTHERWISE SHOWN

ISSUE	DESCRIPTION	DRAWN	APPR'D	DATE
A	ISSUED FOR INFORMATION	J.M.	L.D.	12/19

DATUM AHD | SURVEYOR | AZIMUTH MGA | FIELD BOOK | RELATED PLANS | SCALE AS NOTED

DRAWN J. MILES DATE 12/19
DESIGNED L. DEAN DATE 12/19
CHECKED L. DEAN DATE 12/19

APPROVED (FOR COUNCIL USE ONLY)
SENIOR DESIGN ENGINEER - CIVIL
L. DEAN
DATE 12/19

NORTH POINT

CITY OF WOLLONGONG

ENGINEERING STANDARD DRAWING
HOUSE DRAIN CONNECTIONS

wollongong city of innovation
DESIGN & TECHNICAL SERVICES Ph. 02 42277111

PJ or TR No. TR-452
SHEET OF SHEETS
DRAWING No. 7000
SHEET No. C06
A3 ORIGINAL
ISSUE A

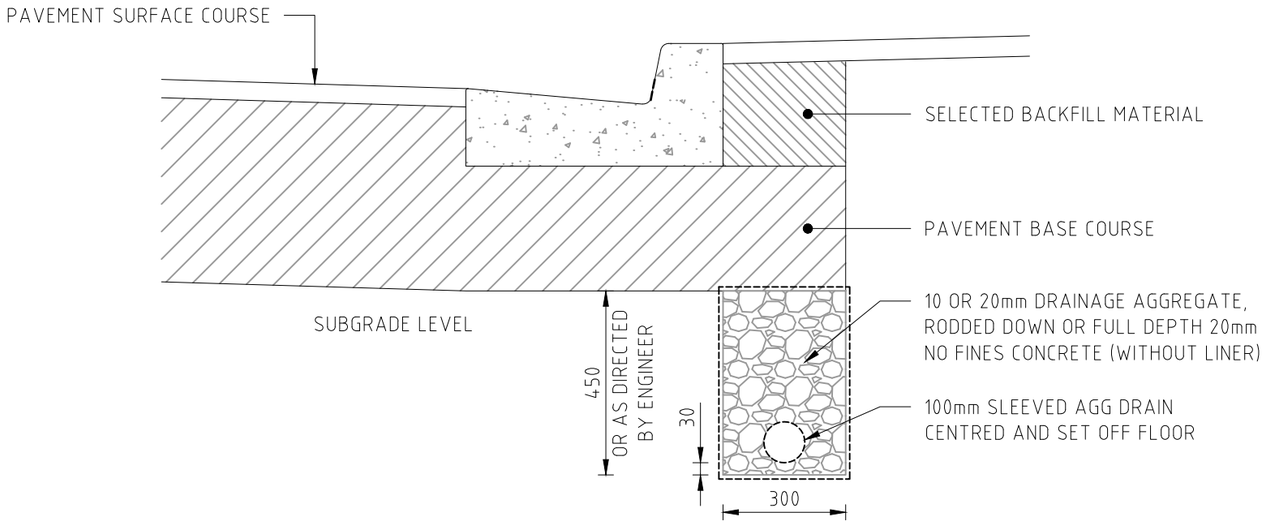

SUBSOIL DRAIN SECTION

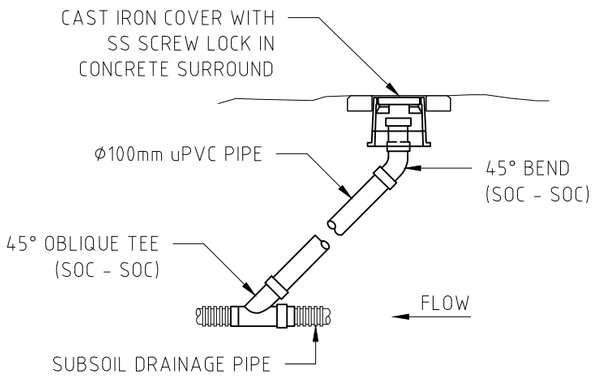

FLUSHING POINT ON LINE

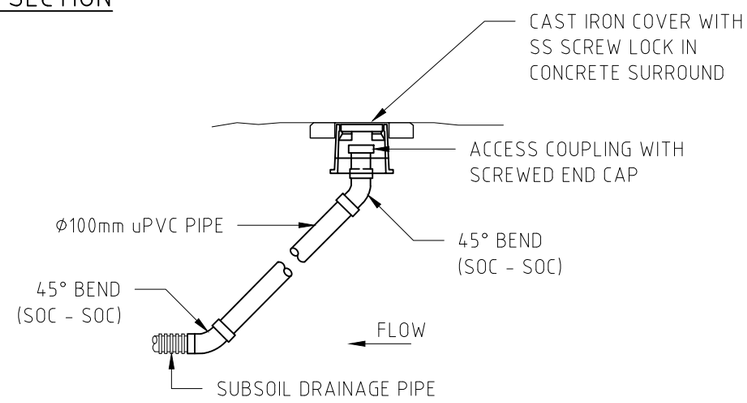

FLUSHING POINT HEAD OF LINE

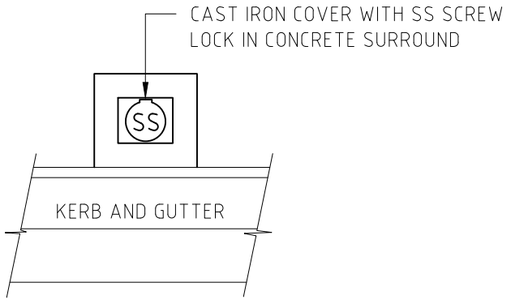

PLAN

NOTES:

1. PROVIDE CLEANING RISERS AT 100m CENTRES, BEHIND DRAIN INSTALLED TO MANUFACTURERS SPECIFICATIONS.
2. PROVIDE FLUSHING POINTS AT MAX 60m CENTRES.
3. SELECT FILTER MATERIAL SHALL BE 10 OR 20mm DRAINAGE AGGREGATE, FULL DEPTH 20mm NO FINES CONCRETE (WITHOUT LINER) OR AS SPECIFIED BY WCC.
4. ALL FILTER MATERIAL SHALL BE GEOTEXTILE WRAPPED, NON WOVEN GEOTEXTILE OF STRENGTH CLASS A.
5. SUBSOIL DRAINAGE PIPE SHALL BE SLOTTED uPVC OR PERFORATED, RIBBED HDPE TO AS2439.1.
6. MINIMUM LONGITUDINAL GRADES FOR PIPES SHALL BE:
   - 6.1. RIBBED HDPE 1.5%
   - 6.2. SLOTTED uPVC 1%
   - 6.3. 450mm STRIP DRAIN 0.5%
7. uPVC PIPE AND FITTINGS SHALL BE MIN CLASS 12.
8. TRENCH BACKFILL FILTER MEDIA IS TO BE WRAPPED WITH FILTER FABRIC BLANKET. LONGITUDINAL LAPPING OF THE FABRIC IS TO BE 500mm MINIMUM WITH THE UPSTREAM SHEET PLACED OVER DOWNSTREAM SHEET.
9. FILTER MEDIA IS TO BE MECHANICALLY COMPACTED IN LAYERS NOT EXCEEDING 300mm WITH CARE TO BE TAKEN TO AVOID DAMAGE TO THE FILTER FABRIC BLANKET AND SOCK AND THE PERFORATED DRAINAGE PIPE.
10. SUBSOIL DRAINAGE PIPELINES WILL NORMALLY OUTFALL INTO A STORMWATER DRAINAGE PIT. OTHER FORMS OF OUTFALL SHOULD HAVE APPROPRIATE MEASURES TAKEN TO PREVENT BLOCKAGE, EROSION AND INFESTATION OF VERMIN.
11. WHEN INSTALLING GEOTEXTILE, DO NOT ALLOW LOOSE MATERIAL FROM TRENCH WALLS OR OUTSIDE THE TRENCH TO ENTER THE EXCAVATION. KEEP ALL GEOTEXTILES CLEAN, AND SECURE THE GEOTEXTILE TO ENSURE THAT THEY ARE LOCATED AS SHOWN IN THE DRAWINGS ON COMPLETION OF BACKFILLING.

ISSUE	DESCRIPTION	DRAWN	APPR'D	DATE
A	ISSUED FOR INFORMATION	J.M.	L.D.	12/19

DATUM AHD | SURVEYOR | AZIMUTH MGA | FIELD BOOK | RELATED PLANS | SCALE AS NOTED

DRAWN J. MILES DATE 12/19
DESIGNED L. DEAN DATE 12/19
CHECKED L. DEAN DATE 12/19

APPROVED (FOR COUNCIL USE ONLY)
SENIOR DESIGN ENGINEER - CIVIL
L. DEAN
DATE 12/19

ISO 9001 Quality Management

NORTH POINT

CITY OF WOLLONGONG
ENGINEERING STANDARD DRAWING
SUBSOIL DRAINAGE

wollongong city of innovation
DESIGN & TECHNICAL SERVICES Ph. 02 42277111

PJ or TR No. TR-452
SHEET OF SHEETS
DRAWING No. 7000
SHEET No. C07
A3 ORIGINAL
ISSUE A

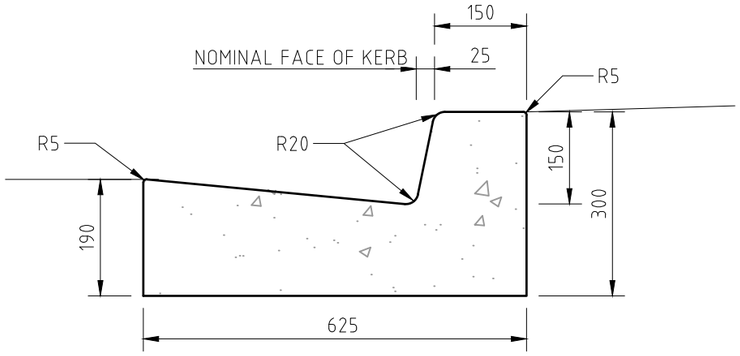

150mm BARRIER
KERB & GUTTER
SCALE 1:10

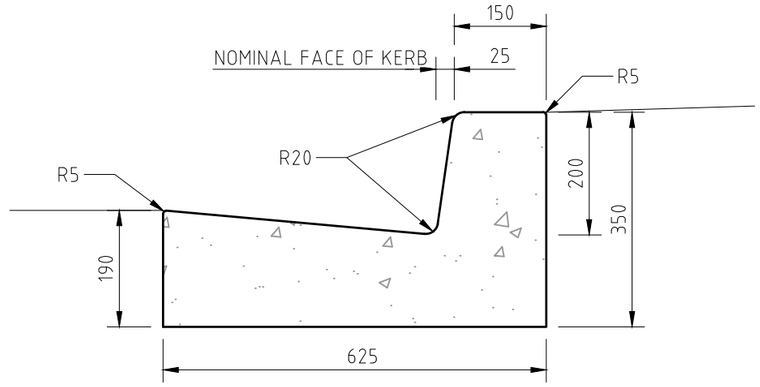

200mm BARRIER
KERB & GUTTER
SCALE 1:10

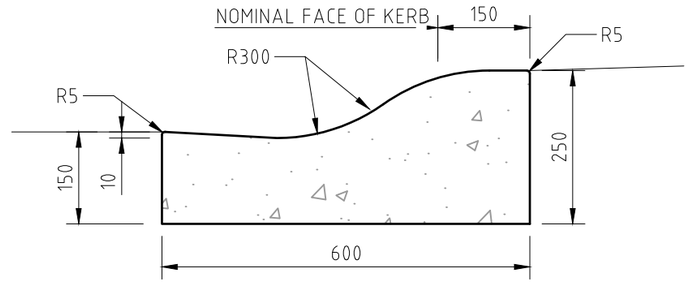

LOW PROFILE (110mm)
ROLL KERB & GUTTER
SCALE 1:10

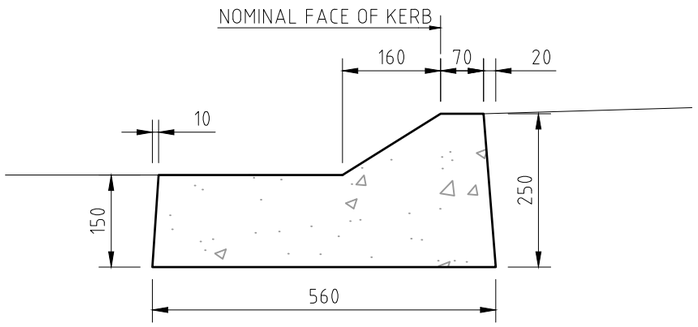

TYPE SE
KERB & GUTTER
SCALE 1:10

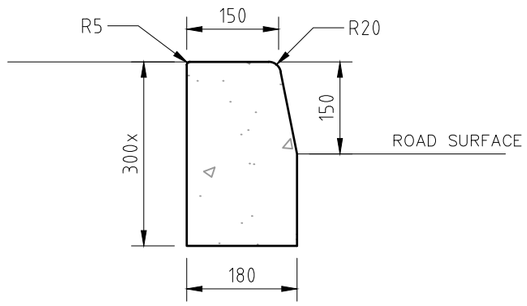

150mm KERB ONLY
x DEPTH VARIABLE
SCALE 1:10

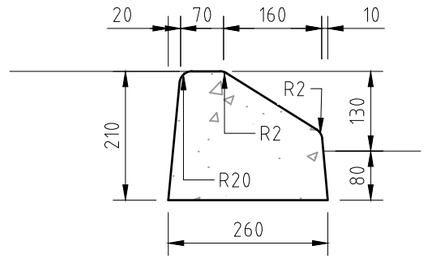

TYPE SF KERB
SCALE 1:10

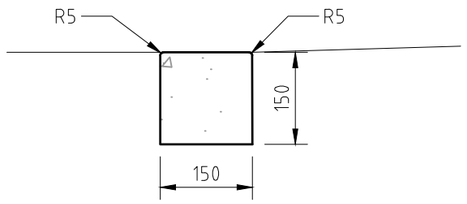

150mm EDGE STRIP
SCALE 1:10

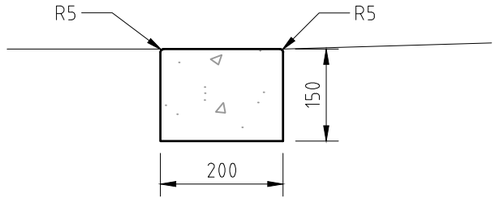

200mm EDGE STRIP
SCALE 1:10

NOTES:

1. ROAD SUB BASE SHALL EXTEND BENEATH KERBS, GUTTERS AND DISH CROSSINGS 150mm BEHIND REAR OF KERB, MINIMUM DEPTH OF 175mm AND SUBJECT TO SUB-SOIL DRAINAGE REQUIREMENTS.
2. CONCRETE SHALL BE OF 20 MPa COMPRESSIVE STRENGTH (F'c) AT 28 DAYS FOR KERB AND GUTTERS, DISH CROSSINGS, MISCELLANEOUS KERBS AND EDGE STRIPS
3. CONDUIT LOCATIONS SHALL BE MARKED ON KERB WITH AN APPROVED TOOL OR AS OTHERWISE DIRECTED
4. REFER TO SHEET C12 FOR DISH CROSSING KERB DETAILS
5. ALL DIMENSIONS ARE IN MILLIMETRES UNLESS OTHERWISE SHOWN

ISSUE	DESCRIPTION	DRAWN	APPR'D	DATE
A	ISSUED FOR INFORMATION	J.M.	L.D.	12/19

DATUM AHD | SURVEYOR | AZIMUTH MGA | FIELD BOOK | RELATED PLANS | SCALE AS NOTED

DRAWN J. MILES DATE 12/19
DESIGNED L. DEAN DATE 12/19
CHECKED L. DEAN DATE 12/19

APPROVED (FOR COUNCIL USE ONLY)
SENIOR DESIGN ENGINEER - CIVIL
L. DEAN
DATE 12/19

NORTH POINT

CITY OF WOLLONGONG
ENGINEERING STANDARD DRAWINGS
STANDARD KERB PROFILES

wollongong city of innovation
DESIGN & TECHNICAL SERVICES
Ph. 02 42277111

PJ or TR No. TR-452
SHEET OF SHEETS
DRAWING No. 7000
SHEET No. C10
A3 ORIGINAL
ISSUE A

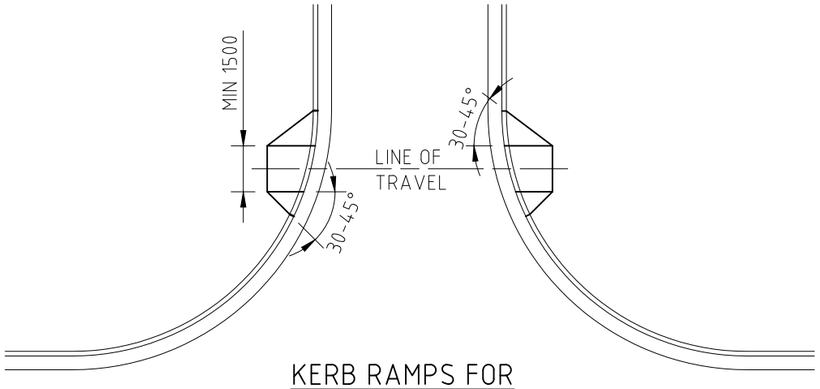

KERB RAMPS FOR ACUTE/OBTUSE INTERSECTION

NTS

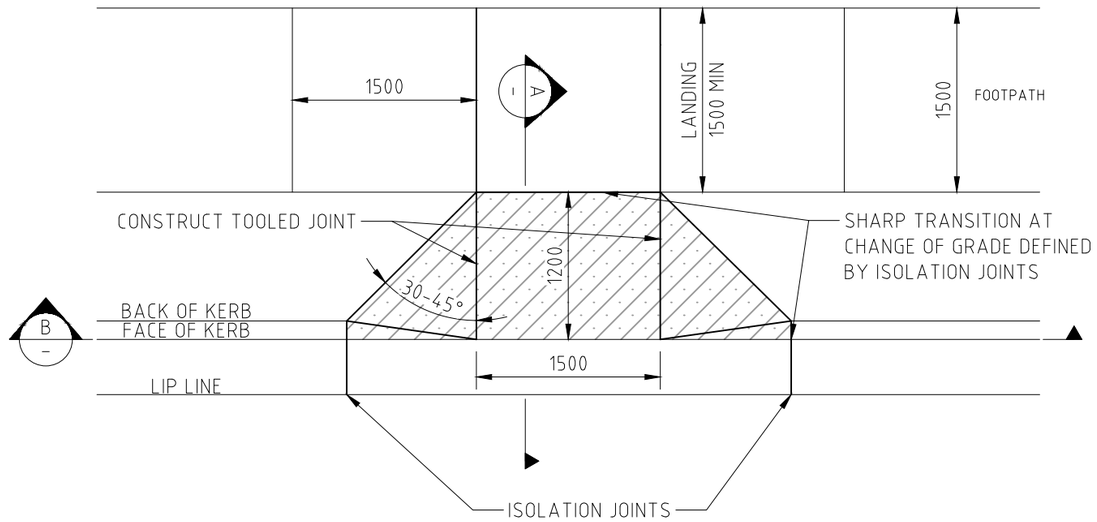

PLAN

SCALE 1:50

NOTES:

1. ALL KERB RAMPS ARE TO BE CONSTRUCTED IN CONCRETE (MINIMUM 25 MPa) OF A CONTRASTING COLOUR TO ADJACENT PAVEMEN
   - IF FOOTPATH IS BRICK PAVING, OR COLOURED CONCRETE THE RAMP SHALL BE PLAIN CONCRETE.
   - IF FOOTPATH IS PLAIN CONCRETE, THE RAMP SHALL BE COLOURED (SAHARA) YELLOW.

   NOTE: THE GUTTER SECTION OF KERB RAMP IS TO REMAIN PLAIN CONCRETE AND IS NOT TO BE COLOURED UNDER ANY CIRCUMSTANCES.
2. ALL KERB RAMPS ARE TO BE ALIGNED WITH THE DIRECTION OF PEDESTRIAN TRAVEL. THE TOP OF RAMP SHALL BE CONSTRUCTED PARALLEL TO THE KERB LINE.
3. THE RAMP SHALL BE DEFINED BY SHARP TRANSITION JOINTS/CHANGES IN GRADE THAT WILL DIRECT PEDESTRIANS ALONG THE LINE OF THE CROSSING TOWARDS THE RAMP ON THE OPPOSITE KERB. THE CHANGE IN GRADE BETWEEN THE WINGS AND RAMP SHALL BE DEFINED BY A TOOLED JOINT ONLY.
4. FOR RAMPS AT MARKED FOOT CROSSINGS, ZEBRA CROSSINGS AND OTHER FORMAL CROSSING TYPES REFER TO ROADS AND MARITIME SERVICES 'TRAFFIC SIGNAL DESIGN GUIDE - APPENDIX D' FOR GUIDANCE ON RAMP PLACEMENT.
5. ISOLATION JOINTS TO BE PROVIDED WHERE ENDS OF KERB RAMP ABUTS KERB AND GUTTER OR FOOTPATH.
6. SEPARATE KERB RAMPS MUST BE USED FOR ADJACENT CROSSINGS AT INTERSECTIONS. MINIMUM SEPARATION 400MM (SEE ADJACENT CROSSINGS DETAIL). WHERE ROAD GEOMETRY OR OTHER OBSTRUCTIONS PRECLUDE TWO RAMPS BEING CONSTRUCTED ADJACENT TO EACH OTHER, THE WIDTH OF RAMP WINGS AT THE KERB FACE MAY BE REDUCED. (ABSOLUTE MINIMUM WIDTH OF RAMP WING 600MM.)
8. FOR DETAILS OF KERB AND GUTTER PROFILES REFER TO 7000_C10
9. ALL DIMENSIONS ARE IN MILLIMETRES UNLESS OTHERWISE SHOWN
10. WHERE SLOPE OF EXISTING GUTTER IS GREATER THAN 1 in 8, UNEVEN OR CRACKED THE GUTTER MUST BE REMOVED AND RECONSTRUCTED

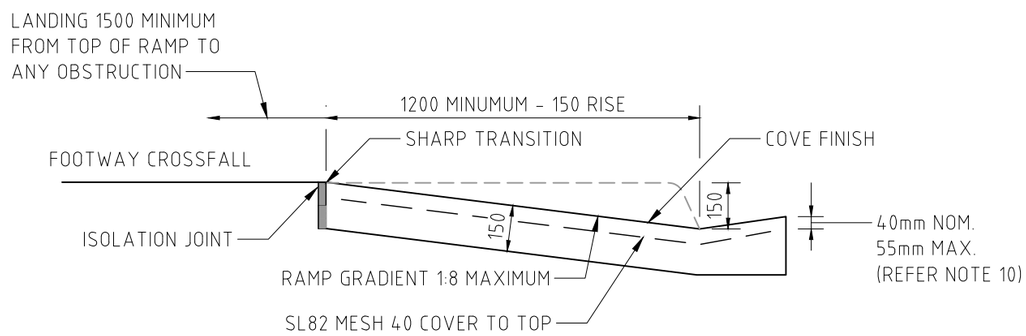

SECTION A

SCALE 1:20

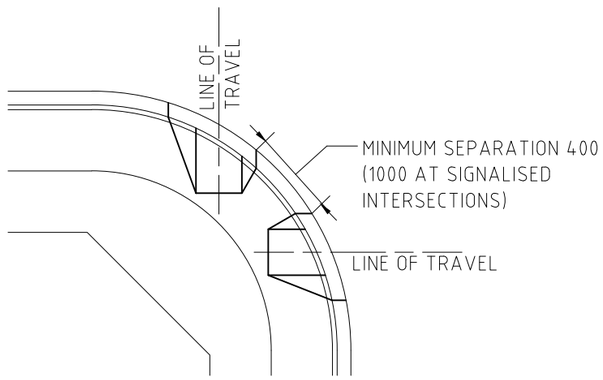

ADJACENT CROSSINGS

NOTE: LENGTH OF KERB RAMP MAY BE VARIED TO SUIT SITE CONDITIONS MINIMUM 1200mm

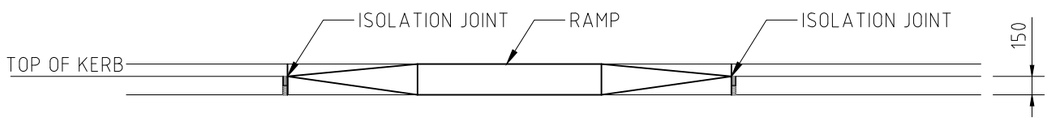

SECTION B

SCALE 1:50

ISSUE	DESCRIPTION	DRAWN	APPR'D	DATE
A	ISSUED FOR INFORMATION	J.M.	L.D.	12/19

DATUM AHD | SURVEYOR | AZIMUTH MGA | FIELD BOOK | RELATED PLANS | SCALE AS NOTED

DRAWN J. MILES DATE 12/19
DESIGNED L. DEAN DATE 12/19
CHECKED L. DEAN DATE 12/19

APPROVED (FOR COUNCIL USE ONLY)
SENIOR DESIGN ENGINEER - CIVIL
L. DEAN
DATE 12/19

NORTH POINT

CITY OF WOLLONGONG

ENGINEERING STANDARD DRAWINGS
STANDARD KERB RAMPS
FOR 150mm BARRIER KERB

wollongong city of innovation
DESIGN & TECHNICAL SERVICES
Ph. 02 42277111

PJ or TR No. TR-452 | A3
SHEET OF SHEETS | ORIGINAL
DRAWING No. 7000 | SHEET No. C11 | ISSUE A

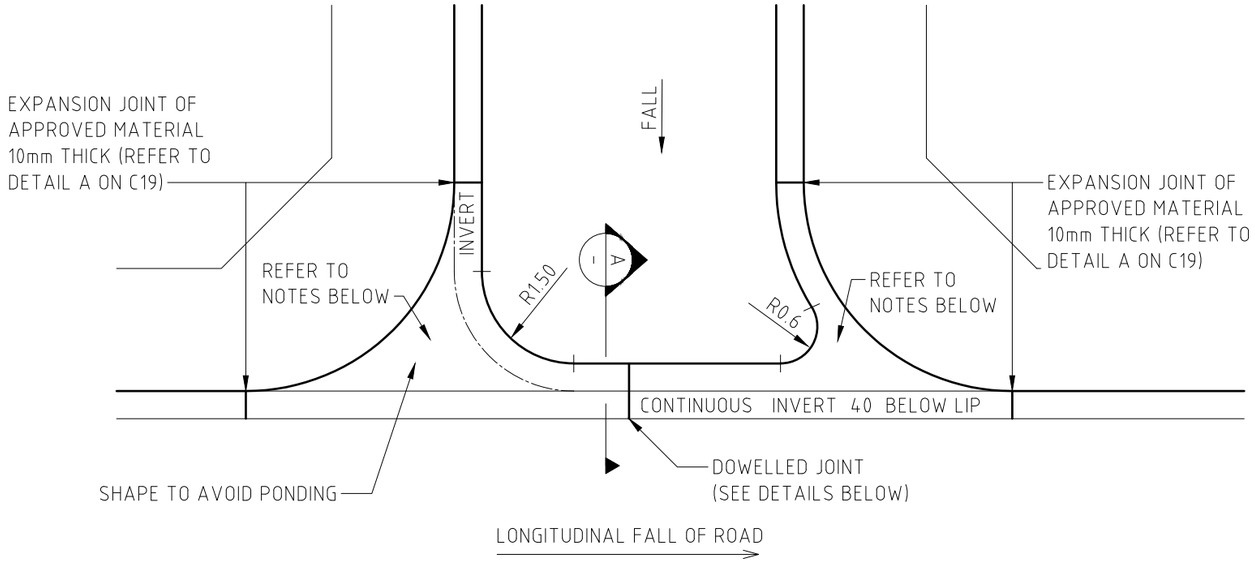

PLAN
SCALE 1:100

- GUTTER TO BE 150 THICK REINFORCED WITH SL82 MESH AND FORMED INTEGRAL WITH KERB.
- CONCRETE STRENGTH TO BE 32MPa

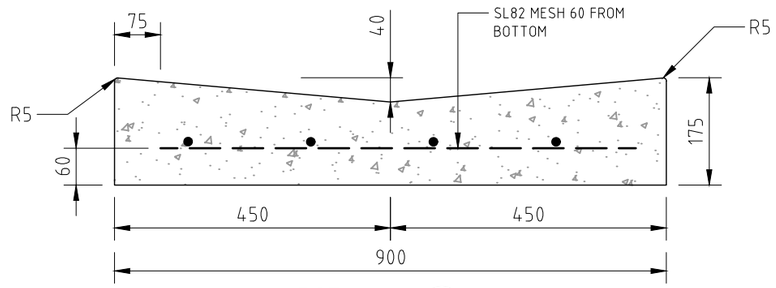

SECTION A
SCALE 1:10

NOTES:

1. ALL DIMENSIONS IN MILLIMETRES UNLESS OTHERWISE SHOWN

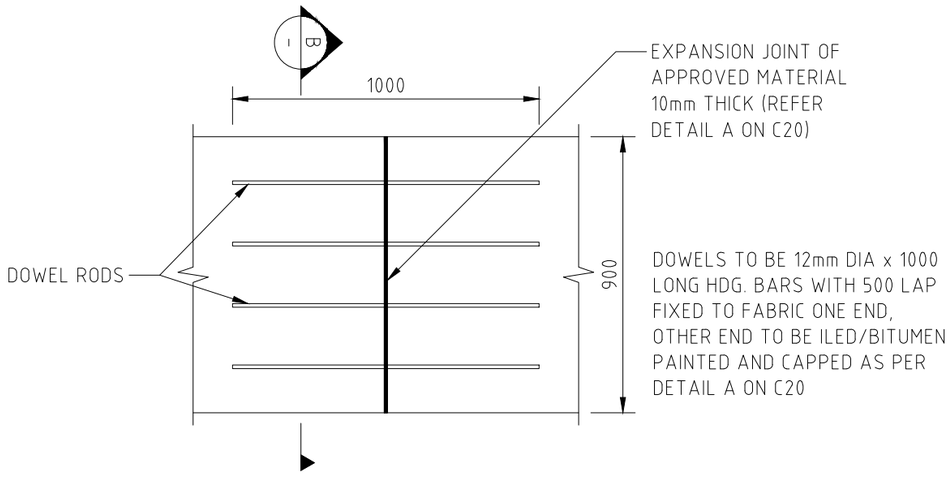

DOWELLED JOINT DETAIL
SCALE 1:20

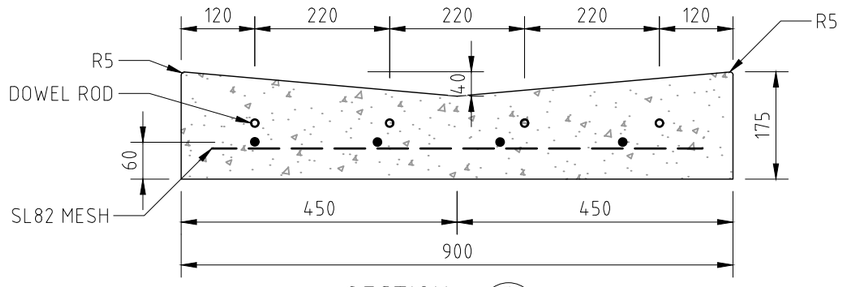

SECTION B
SCALE 1:10

ISSUE	DESCRIPTION	DRAWN	APPR'D	DATE
A	ISSUED FOR INFORMATION	J.M.	L.D.	12/19

DATUM AHD | SURVEYOR
AZIMUTH MGA | FIELD BOOK
RELATED PLANS
SCALE AS NOTED

DRAWN J. MILES DATE 12/19
DESIGNED L. DEAN DATE 12/19
CHECKED L. DEAN DATE 12/19

APPROVED (FOR COUNCIL USE ONLY)
SENIOR DESIGN ENGINEER - CIVIL
L. DEAN
DATE 12/19

NORTH POINT

CITY OF WOLLONGONG

ENGINEERING STANDARD DRAWINGS
STANDARD DISH CROSSING

wollongong city of innovation
DESIGN & TECHNICAL SERVICES
Ph. 02 42277111

PJ or TR No. TR-452
SHEET OF SHEETS
DRAWING No. 7000
SHEET No. C12
ISSUE A
A3 ORIGINAL

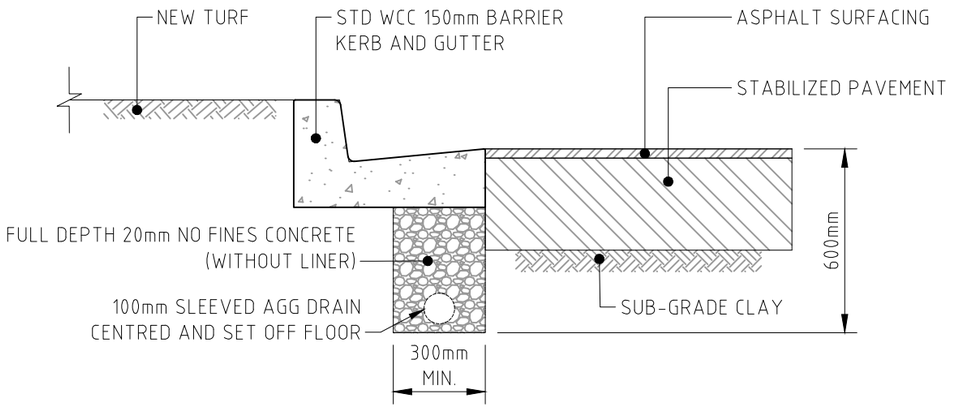

SUB SOILS DRAINAGE INSTALLATION AHEAD OF PAVEMENT RECONSTRUCTION

SCALE 1:20

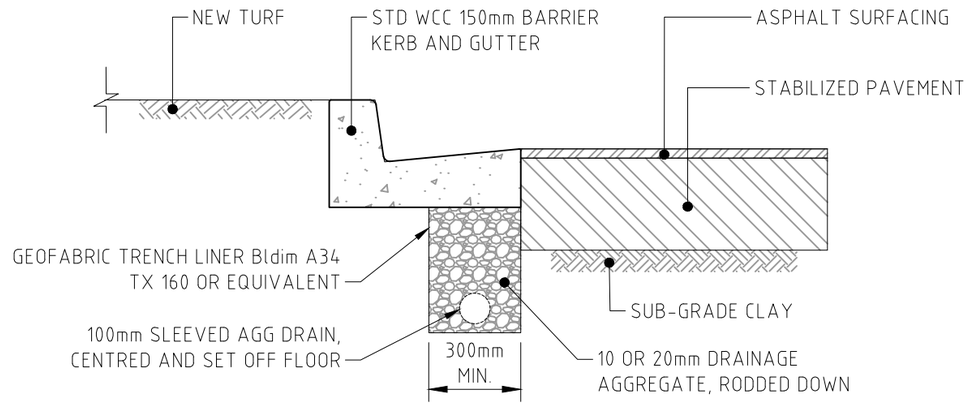

SUB SOIL DRAINAGE INSTALLATION UNDER NEW K&G

SCALE 1:20

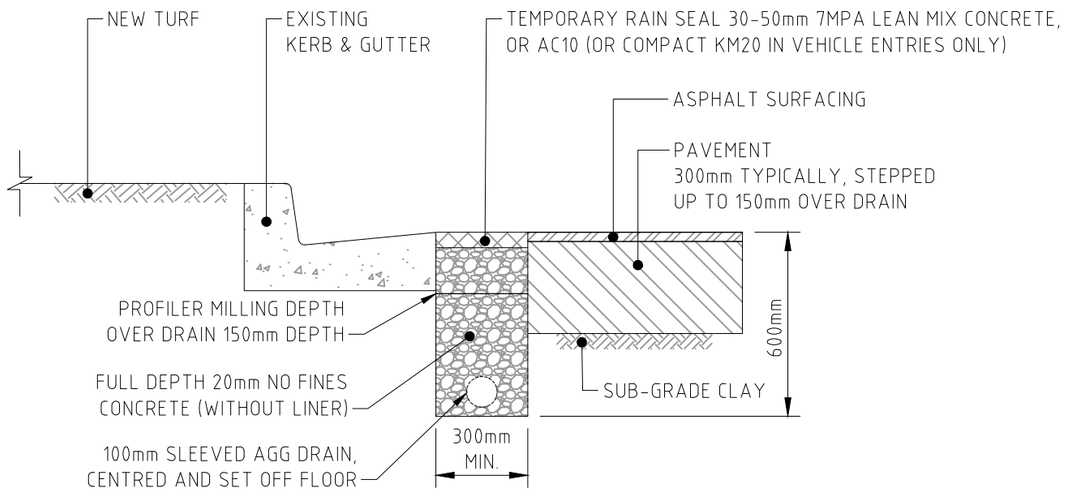

SUB SOIL DRAINAGE IN-ROAD DETAIL FOR EXISTING K&G

SCALE 1:20

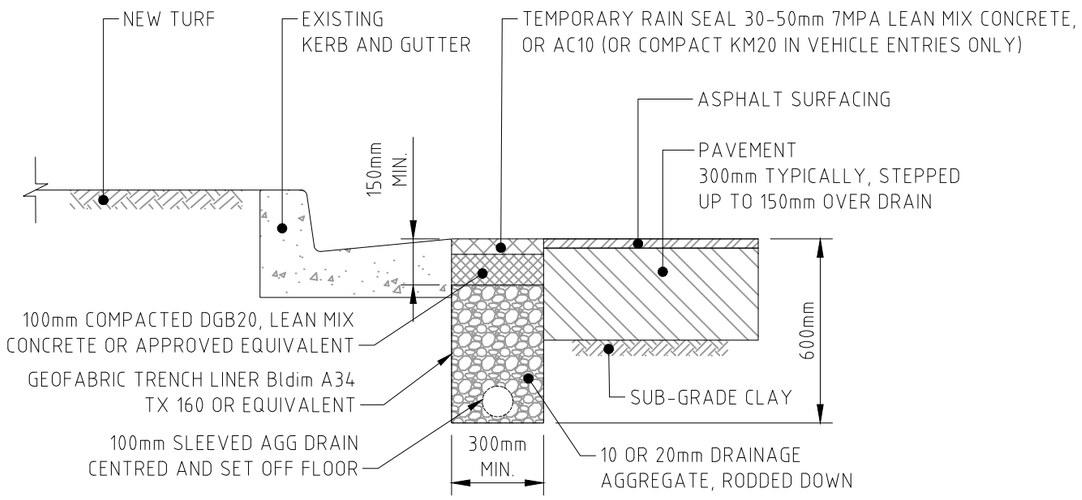

SUB SOIL DRAINAGE IN-ROAD DETAIL FOR EXISTING K&G

SCALE 1:20

ISSUE	DESCRIPTION	DRAWN	APPR'D	DATE
A	ISSUED FOR INFORMATION	T.P.	L.D.	12/19

DATUM AHD	SURVEYOR
AZIMUTH MGA	FIELD BOOK
RELATED PLANS	
SCALE AS NOTED	

DRAWN	T.POLLOCK	DATE 12/19
DESIGNED	K.BOGIE	DATE 12/19
CHECKED	S.NAUMOSKI	DATE 12/19

APPROVED (FOR COUNCIL USE ONLY)
SENIOR DESIGN ENGINEER - CIVIL
L. DEAN
DATE 12/19

NORTH POINT

CITY OF WOLLONGONG

ENGINEERING STANDARD DRAWINGS
SUBSOIL DRAINAGE INSTALLATION

wollongong city of innovation
DESIGN & TECHNICAL SERVICES
Ph. 02 42277111

PJ or TR No.	TR-452	A3
SHEET	OF SHEETS	ORIGINAL
DRAWING No.	SHEET No.	ISSUE
7000	C13	A

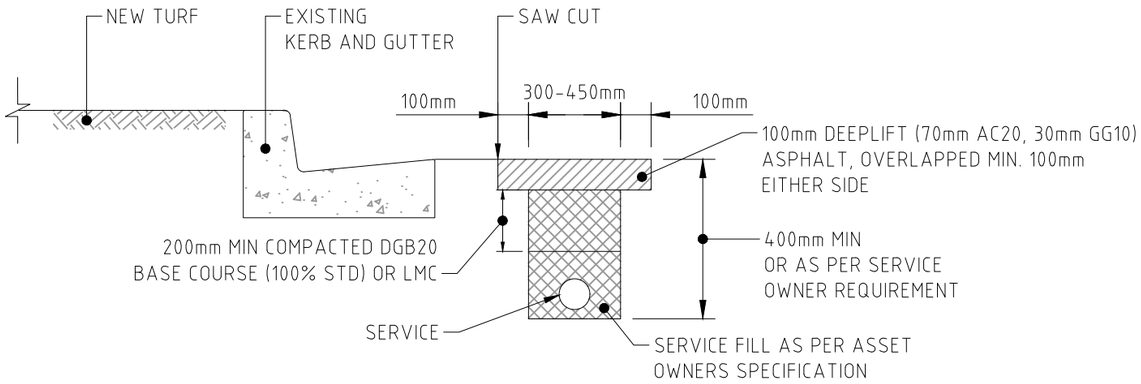

PERMANENT REINSTATEMENT

SCALE 1:20

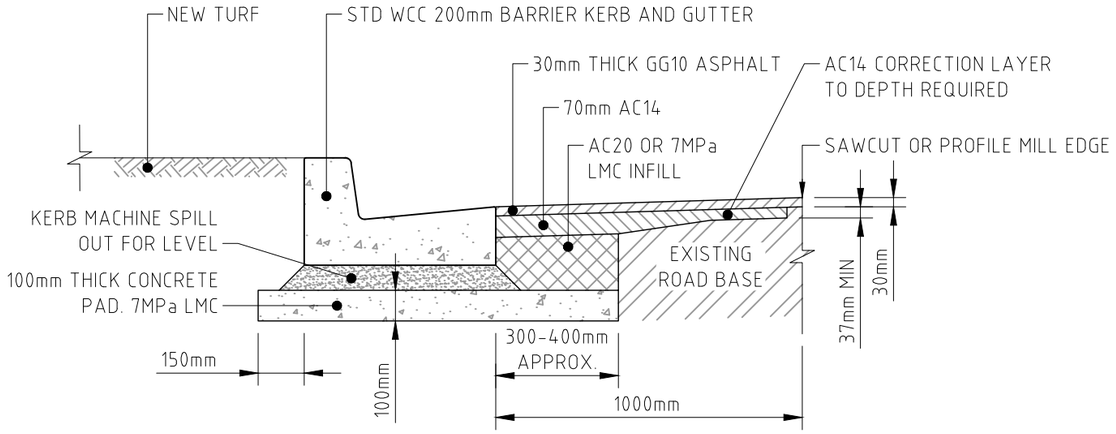

TYPICAL ROAD PAVEMENT FOR NEW 200 KERB SECTION

SCALE 1:20

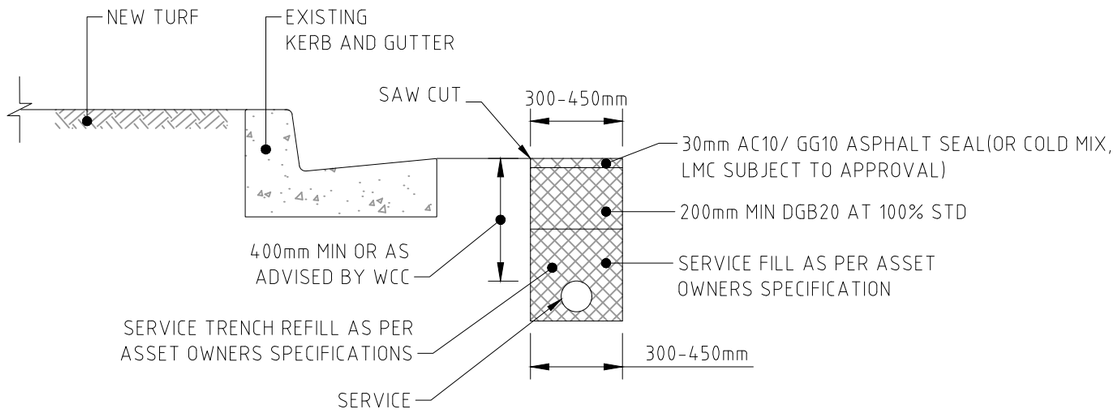

TEMPORARY REINSTATEMENT

SCALE 1:20

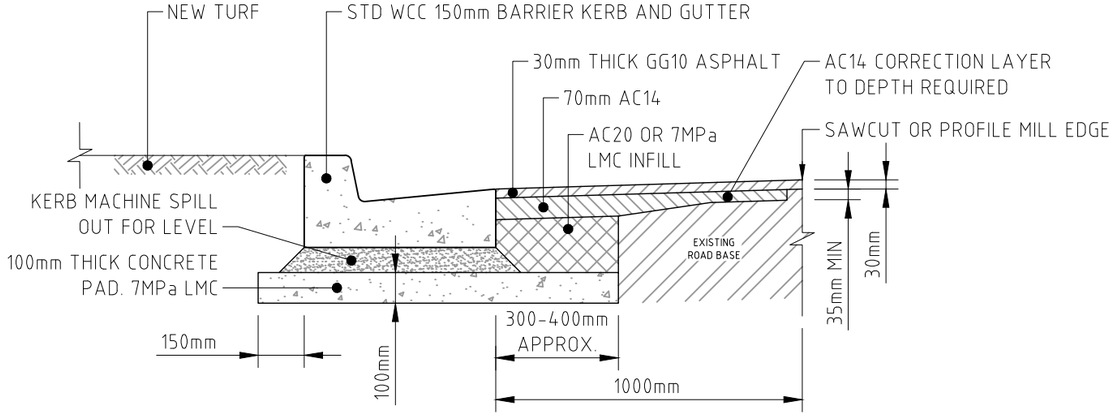

TYPICAL ROAD PAVEMENT FOR NEW 150 KERB SECTION

SCALE 1:20

ISSUE	DESCRIPTION	DRAWN	APPR'D	DATE
A	ISSUED FOR INFORMATION	T.P	L.D.	12/19

DATUM AHD	SURVEYOR	DRAWN T.POLLOCK	DATE 12/19
AZIMUTH MGA	FIELD BOOK	DESIGNED K.BOGIE	DATE 12/19
RELATED PLANS		CHECKED S.NAUMOSKI	DATE 12/19
SCALE AS NOTED			

APPROVED
(FOR COUNCIL USE ONLY)
SENIOR DESIGN ENGINEER - CIVIL
L. DEAN
DATE 12/19

NORTH POINT

CITY OF WOLLONGONG

ENGINEERING STANDARD DRAWINGS
SERVICE TRENCHES IN ROAD AND
KERB RECONSTRUCTION

wollongong city of innovation

DESIGN & TECHNICAL SERVICES
Ph. 02 42277111

PJ or TR No.	TR-452	A3
SHEET OF SHEETS		ORIGINAL
DRAWING No.	SHEET No.	ISSUE
7000	C14	A

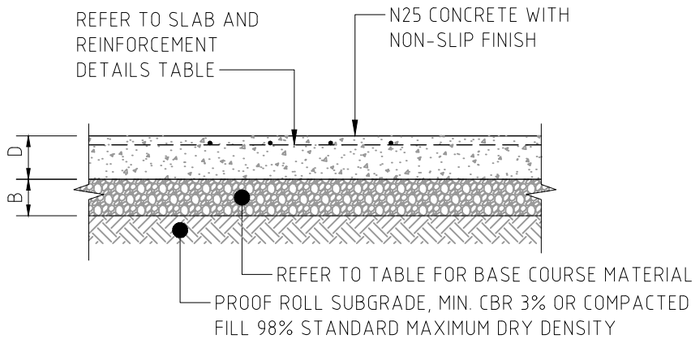

TYPICAL SLAB DETAIL

SCALE N.T.S.

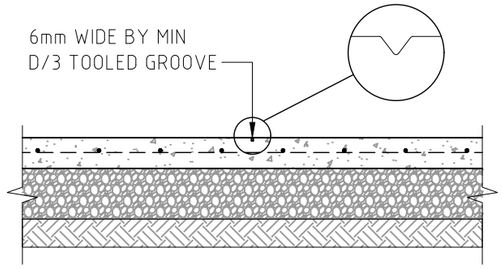

TYPICAL TOOLED JOINT (TJ) DETAIL

SCALE N.T.S.

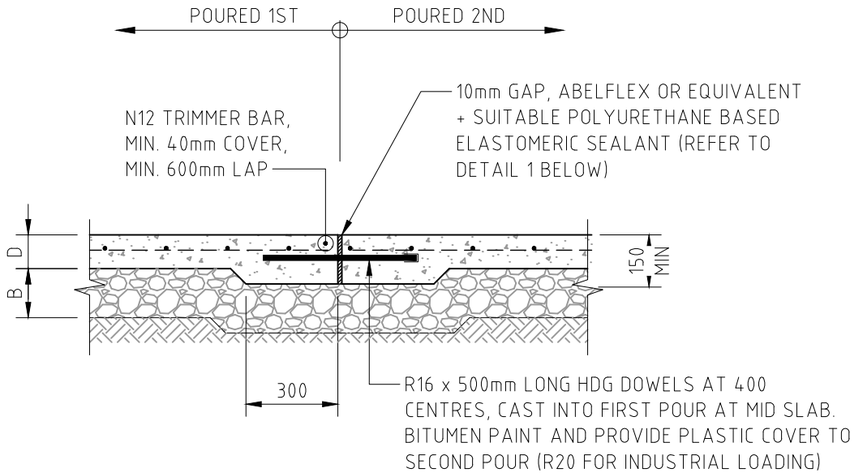

TYPICAL EXPANSION JOINT (EJ1)

SCALE N.T.S.

NOTE: ALTERNATIVE PROPRIETARY SYSTEMS SUCH AS DANLEY DOWELS WILL BE CONSIDERED, SUBJECT TO APPROVAL.

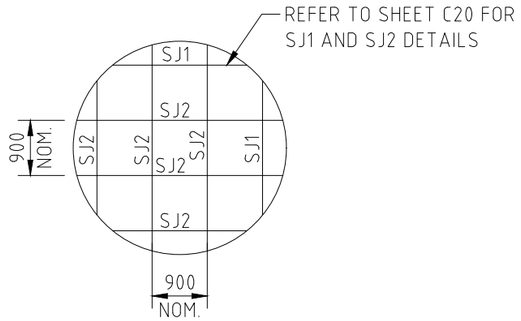

TYPICAL DECORATIVE JOINT LAYOUT

SCALE 1:100

SLAB + REINFORCEMENT DETAILS				
TYPE	D(mm)	B(mm)	REINFORCEMENT	BASE COURSE MATERIAL
FOOTPATH/ SHARED PATH/ CYCLEWAY	100	25	SL72 MESH	FCR
DOMESTIC DRIVEWAY	150	75	SL82 MESH	FCR/DGB20
LIGHT INDUSTRIAL/ UNIT BLOCK	175	100	SL82 MESH	DGB20
HEAVY INDUSTRIAL	200	150	SL92 MESH	DGB20

NOTES:
- CONCRETE STRENGTH TO BE 25MPa MINIMUM
- TOP COVER TO BE 40mm MINIMUM
- ALSO REFER AS3600

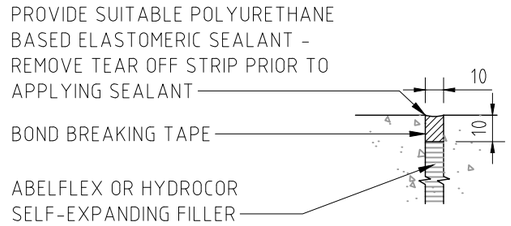

DETAIL 1 - EJ1/IJ1 SEALANT DETAIL

SCALE N.T.S.

NOTES:

1. SAWN/TOOLED JOINTS TO BE PLACED PLACED LATERALLY AT INTERVALS NOT EXCEEDING 1 X PATH WIDTH (MAX 4m)
2. EXPANSION JOINTS TO BE PLACED LATERALLY AT INTERVALS NOT EXCEEDING 3 X PATH WIDTH (MAX 12m)
3. ALL DIMENSIONS IN MILLIMETRES UNLESS OTHERWISE SHOWN

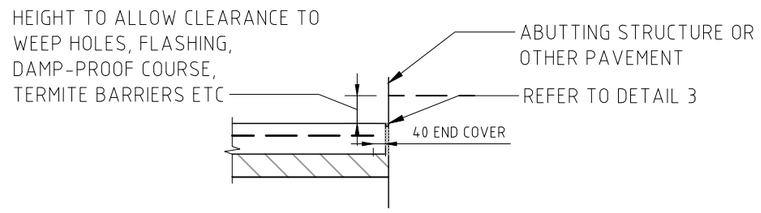

ISOLATION JOINT - 'IJ' DETAIL

SCALE 1:20

ISSUE	DESCRIPTION	DRAWN	APPR'D	DATE
A	ISSUED FOR INFORMATION	J.M.	L.D.	12/19

DATUM AHD | SURVEYOR | AZIMUTH MGA | FIELD BOOK | RELATED PLANS | SCALE AS NOTED

DRAWN J. MILES DATE 12/19
DESIGNED J. GRIFFITHS DATE 12/19
CHECKED L. DEAN DATE 12/19

APPROVED (FOR COUNCIL USE ONLY)
SENIOR DESIGN ENGINEER - CIVIL
L. DEAN
DATE 12/19

NORTH POINT

CITY OF WOLLONGONG
ENGINEERING STANDARD DRAWINGS
TYPICAL JOINTING DETAILS
DETAILS SHEET 1

wollongong city of innovation
DESIGN & TECHNICAL SERVICES Ph. 02 42277111

PJ or TR No. TR-452
SHEET OF SHEETS
DRAWING No. 7000
SHEET No. C19
A3 ORIGINAL
ISSUE A

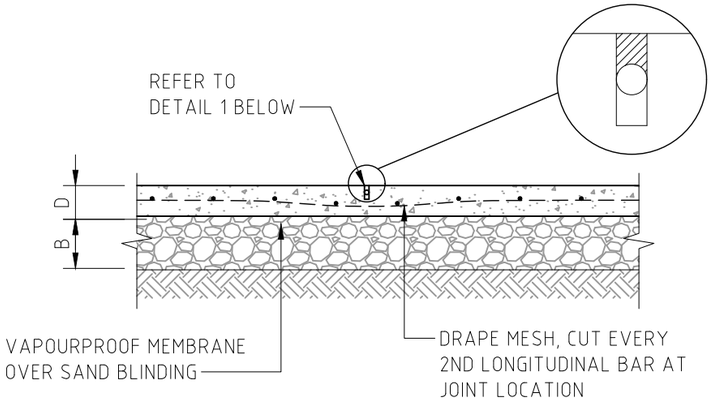

TYPICAL SAWN JOINT (SJ1) DETAIL

SCALE N.T.S.

ALTERNATIVELY PROVIDE TOOLED JOINT

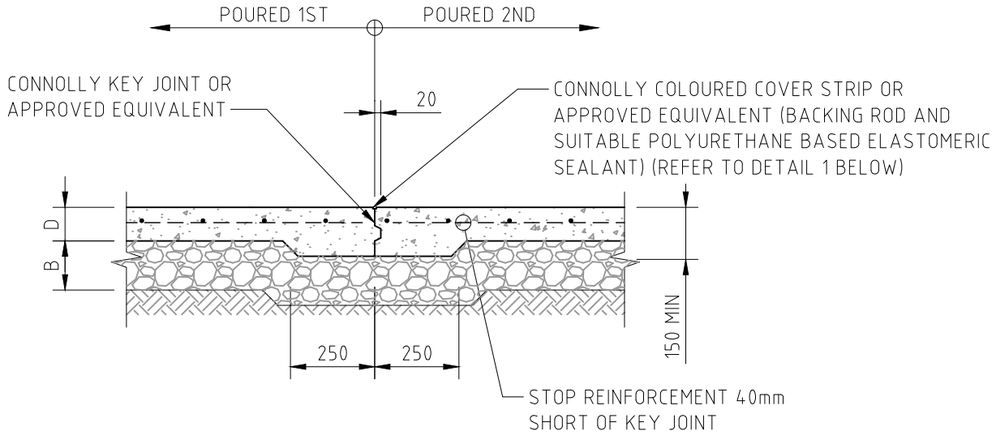

TYPICAL EXPANSION KEY JOINT (KJ1) DETAIL

SCALE N.T.S.

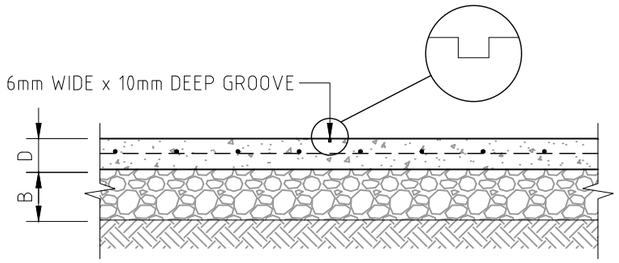

TYPICAL SAWN JOINT (SJ2) DETAIL

SCALE N.T.S.

(DECORATIVE)

6mm WIDE BY MIN D/3 DEEP GROOVE
RULED AT TIME OF POURING SLAB OR
SAWN WITHIN 4-12 HOURS.
PROVIDE SUITABLE POLYURETHANE
BASED ELASTOMERIC SEALANT -
REMOVE TEAR OFF STRIP PRIOR TO
APPLYING SEALANT

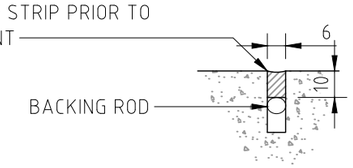

DETAIL 1 - SJ1/KJ1 SEALANT DETAIL

SCALE N.T.S.

NOTES:

1. ALL DIMENSIONS IN MILLIMETRES UNLESS OTHERWISE SHOWN

ISSUE	DESCRIPTION	DRAWN	APPR'D	DATE
A	ISSUED FOR INFORMATION	J.M.	L.D.	12/19

DATUM AHD	SURVEYOR	DRAWN J. MILES	DATE 12/19
AZIMUTH MGA	FIELD BOOK	DESIGNED J. GRIFFITHS	DATE 12/19
RELATED PLANS		CHECKED L. DEAN	DATE 12/19
SCALE AS NOTED			

APPROVED (FOR COUNCIL USE ONLY)

SENIOR DESIGN ENGINEER - CIVIL

L. DEAN

DATE 12/19

NORTH POINT

CITY OF WOLLONGONG

ENGINEERING STANDARD DRAWINGS
TYPICAL JOINTING DETAILS
DETAILS SHEET 2

wollongong city of innovation

DESIGN & TECHNICAL SERVICES
Ph. 02 42277111

PJ or TR No.	TR-452	A3
SHEET OF SHEETS		ORIGINAL
DRAWING No.	SHEET No.	ISSUE
7000	C20	A

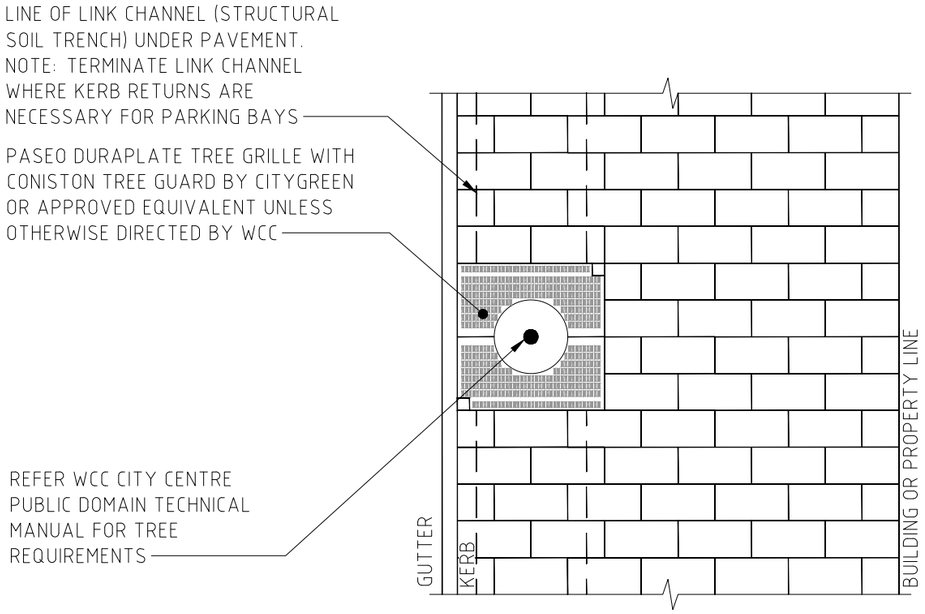

FOOTWAY PAVEMENTS - CORE AND CIVIC STREETS

SCALE: N.T.S.

PAVEMENT:
MAIN BODY OF PAVEMENT TO BE 'BASALT DARK' BY WILMID PTY LTD (OR APPROVED EQUIVALENT) DARK GREY BASALT WITH AN EXFOLIATED FINISH, 600x300x40mm, LAY PERPENDICULAR TO KERB.

SAMPLES TO BE APPROVED BY WCC PRIOR TO CONSTRUCTION.

SEALANT:
PENETRATING SEALER 'SPIRIT NATURAL PAVING SEALER' BY SPIRIT MARBLE AND TILE CARE PTY LTD (OR APPROVED EQUIVALENT).

STRUCTURAL DESIGN REQUIREMENTS:

SUBBASE	25mm DGB20 COMPACTED TO 98% STANDARD MAXIMUM DRY DENSITY
BASE	100mm THICK 7MPa MASS CONCRETE
PAVEMENT	600x300x40mm BASALT PAVING TILES ON 20mm MORTAR BED, GROUT FILLED 3mm MAXIMUM JOINTS
JOINT ISOLATION	ABUTTING KERBS, PITS AND BUILDINGS, ABELFLEX OR APPROVED EQUAL WITH CAULKING MATERIAL SIKAFLEX PRO OR APPROVED EQUAL, COLOUR: CONCRETE GREY, REFER TO 'IJ' DETAIL C19

TREE PIT REQUIREMENTS:
TREE GRATE: DURAPLATE PASEO BY CITYGREEN, 1200mm x 1200mm WITH INTEGRATED WATERING INLET MODEL No.RRPREC-ALU OR APPROVED EQUIVALENT
TREE GUARD: CONISTON BY CITYGREEN, 1800mm HIGH x 600mm DIAMETER OR APPROVED EQUIVALENT

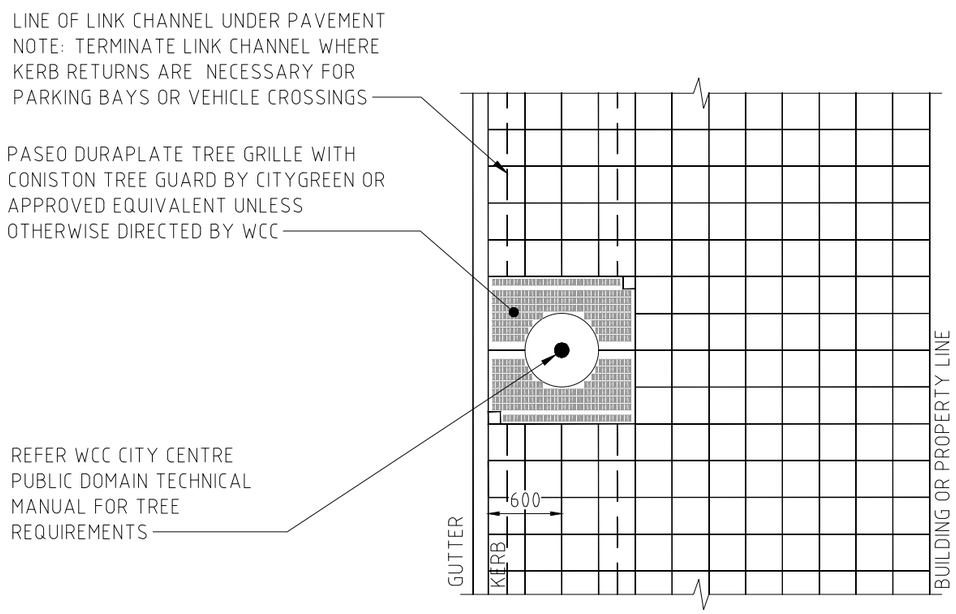

FOOTWAY PAVEMENTS - CITY ENTRY AND MINOR CIVIC STREETS

SCALE: N.T.S.

PAVEMENT:
STRATAPAVE BY ADBRI MASONRY PTY LTD (OR APPROVED EQUIVALENT), COLOUR: EBONY BASALT (DARK GREY), HONED FINISH, 300x300x50mm.

SAMPLES TO BE APPROVED BY WCC PRIOR TO CONSTRUCTION.

SEALANT:
PENETRATING SEALER 'SPIRIT NATURAL PAVING SEALER' BY SPIRIT MARBLE AND TILE CARE PTY LTD (OR APPROVED EQUIVALENT).

STRUCTURAL DESIGN REQUIREMENTS:

SUBBASE	25mm DGB20 COMPACTED TO 98% STANDARD MAXIMUM DRY DENSITY
BASE	100mm THICK 7MPa MASS CONCRETE
PAVEMENT	300x300x40mm UNIT PAVER ON 30mm BEDDING SAND 3mm, GROUT FILLED 3mm MAXIMUM JOINTS
JOINT ISOLATION	ABUTTING KERBS, PITS AND BUILDINGS, ABELFLEX OR APPROVED EQUAL WITH CAULKING MATERIAL SIKAFLEX PRO (OR APPROVED EQUAL), COLOUR: CONCRETE GREY, REFER TO 'IJ' C19

TREE PIT REQUIREMENTS:
TREE GRATE: DURAPLATE PASEO BY CITYGREEN, 1200mm x 1200mm WITH INTEGRATED WATERING INLET MODEL No.RRPREC-ALU OR APPROVED EQUIVALENT
TREE GUARD: CONISTON BY CITYGREEN, 1800mm HIGH x 600mm DIAMETER OR APPROVED EQUIVALENT

NOTES:

1. REFER TO WCC CITY CENTRE PUBLIC DOMAIN TECHNICAL MANUAL FOR FURTHER DETAIL RELATING TO CONSTRUCTION IN THE WOLLONGONG CITY CENTRE
2. ALL DIMENSIONS IN MILLEMETRES UNLESS OTHERWISE SHOWN

ISSUE	DESCRIPTION	DRAWN	APPR'D	DATE
A	ISSUED FOR INFORMATION	J.M.	L.D.	12/19

DATUM AHD | SURVEYOR
AZIMUTH MGA | FIELD BOOK
RELATED PLANS
SCALE AS NOTED

DRAWN J. MILES DATE 12/19
DESIGNED L. DEAN DATE 12/19
CHECKED L. DEAN DATE 12/19

APPROVED (FOR COUNCIL USE ONLY)
SENIOR DESIGN ENGINEER - CIVIL
L. DEAN
DATE 12/19

NORTH POINT

CITY OF WOLLONGONG
ENGINEERING STANDARD DRAWINGS
TYPICAL FOOTPATH PAVEMENT DETAILS SHEET 1

wollongong city of innovation
DESIGN & TECHNICAL SERVICES Ph. 02 42277111

PJ or TR No. TR-452
SHEET OF SHEETS
DRAWING No. 7000
SHEET No. C21
A3 ORIGINAL
ISSUE A

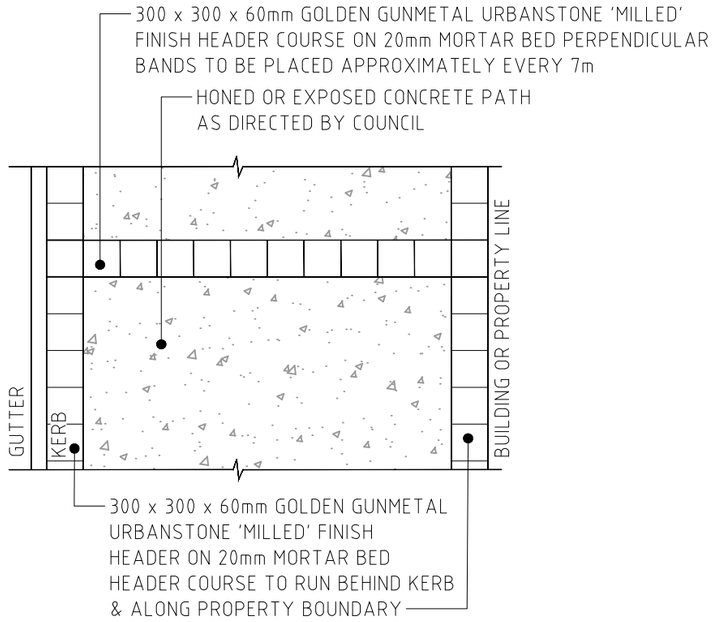

FOOTWAY PAVEMENTS - WATERFRONT

SCALE: N.T.S.

PAVEMENT:
QUARTZ/BLUE METAL AGGREGATE CONCRETE WITH A HONED FINISH TO WCC APPROVED METHOD (SEE BELOW).

ADJACENT TO COMMERCIAL SITES AND NODAL AREAS, PAVEMENT IS TO BE EXPOSED AGGREGATE CONCRETE TO WCC APPROVED METHOD (SEE BELOW).

ON GRADED OR ELEVATED PATHWAYS, PAVEMENT IS TO BE 300x300x40mm ALBANY GREY 'SHOTBLAST' FINISH BY URBANSTONE (OR APPROVED EQUIVALENT). HEADER COURSE TO BE 300x300x60mm GOLDEN GUNMETAL 'MILLED' FINISH URBANSTONE (OR APPROVED EQUIVALENT).

SAMPLES TO BE APPROVED BY WCC PRIOR TO CONSTRUCTION.

SEALANT:
PENETRATING SEALER 'SPIRIT PREMIUM SEAL' BY SPIRIT MARBLE AND TILE CARE PTY LTD (OR APPROVED EQUIVALENT).

STRUCTURAL DESIGN REQUIREMENTS:

SUBBASE	B mm DGB20 COMPACTED TO 98% STANDARD MAXIMUM DRY DENSITY
PAVEMENT	HONED CONCRETE/EXPOSED AGGREGATE AS DIRECTED BY WCC. D mm THICK N25 CONCRETE REINFORCED WITH SL82 MESH. CONCRETE MIX: 1300Kg ROCK/CUBIC METRE 25% BLUE METAL 10mm 25% BLUE METAL 20mm 50% QUARTZ 10mm
HEADER COURSE	300x300x40mm CONCRETE UNIT PAVER
JOINTING (REFER TO C19 &C 20 FOR JOINT DETAILS)	EXPANSION - ADJACENT TO PERPENDICULAR BANDS (7m CENTRES) CONTRACTION - SAWCUT HALF WAY BETWEEN PERPENDICULAR BANDS ISOLATION - ABUTTING KERBS, PITS AND BUILDING ADELFLEX OR APPROVED EQUAL WITH CAULKING MATERIAL SIKAFLEX PRO OR APPROVED EQUAL, COLOUR: CONCRETE GREY RE ENTRANT CORNERS TRIMMING -2 x N12 TRIMMER BARS MIN. 800mm LENGTH AT ALL DIAGONAL CORNERS

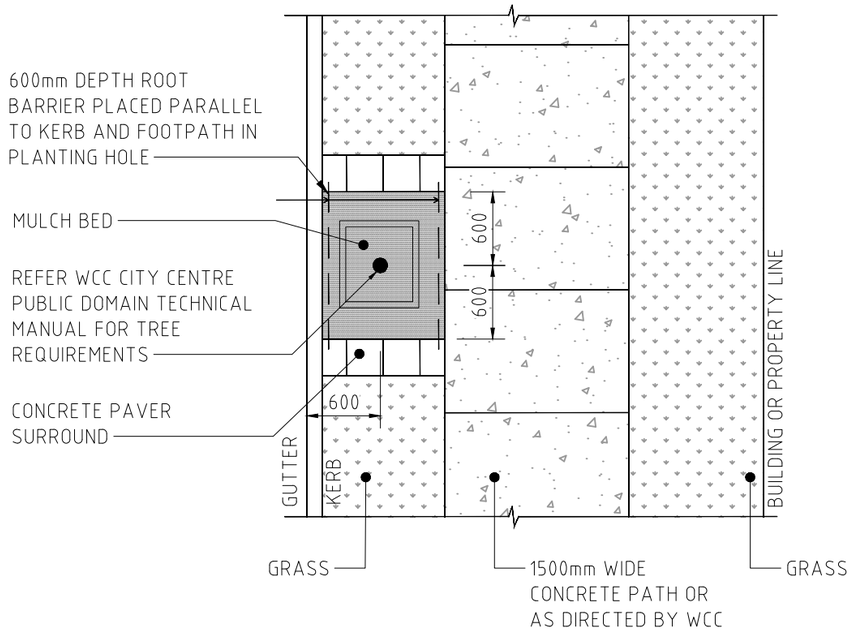

FOOTWAY PAVEMENTS - MIXED USE/RESIDENTIAL

SCALE: N.T.S.

CONCRETE PAVING UNIT TREE PIT SURROUND:
STRATAPAVE BY ADBRI MASONRY PTY LTD (OR APPROVED EQUIVALENT), COLOUR: EBONY BASALT (DARK GREY), HONED FINISH, 300x300x50mm ON 150x350mm CONCRETE FOOTING.

SAMPLES TO BE APPROVED BY WCC PRIOR TO CONSTRUCTION.

CONCRETE FOOTPATH:
1500mm WIDE, BLACK OXIDE COLOURED CONCRETE, EXPOSED BLUE METAL AGGREGATE FINISH, UNLESS OTHERWISE DIRECTED BY WCC.

STRUCTURAL DESIGN REQUIREMENTS:

SUBBASE	B mm DGB20 COMPACTED TO 98% STANDARD MAXIMUM DRY DENSITY
PAVEMENT	EXPOSED AGGREATE D mm THICK N25 CONCRETE REINFORCED WITH SL72 MESH. 24Kg/CUBIC METRE CONCRETE COLOUR SYSTEM (CCS) 'OBSIDIAN' OR 'STALLION' (OR APPROVED EQUIVALENT) BLACK OXIDE
JOINTING (REFER TO C19 & C20 FOR JOINT DETAILS)	EXPANSION - EVERY 4.5m EXPANSION JOINT EVERY 18m, KEY JOINTS EVERY 6m AND TOOLED JOINTS EVERY 2m ABUTTING PITS AND BUILDINGS, ABELFLEX OR APPROVED EQUAL WITH SIKAFLEX OR APPROVED EQUAL TO MATCH CONCRETE COLOUR RE ENTRANT CORNERS TRIMMING -2 x N12 TRIMMER BARS MIN. 800mm LENGTH AT ALL DIAGONAL CORNERS

NOTES:

1. REFER TO WCC CITY CENTRE PUBLIC DOMAIN TECHNICAL MANUAL FOR FURTHER DETAIL RELATING TO CONSTRUCTION IN THE WOLLONGONG CITY CENTRE
2. REFER TO SLAB AND REINFORCEMENT DETAILS TABLE SHEET C19 FOR DIMENSIONS AND REINFORCEMENT
3. ALL DIMENSIONS IN MILLIMETRES UNLESS OTHERWISE SHOWN

ISSUE	DESCRIPTION	DRAWN	APPR'D	DATE
A	ISSUED FOR INFORMATION	J.M.	L.D.	12/19

DATUM AHD | SURVEYOR | AZIMUTH MGA | FIELD BOOK | RELATED PLANS | SCALE AS NOTED

DRAWN J. MILES DATE 12/19
DESIGNED L. DEAN DATE 12/19
CHECKED L. DEAN DATE 12/19

APPROVED (FOR COUNCIL USE ONLY)
SENIOR DESIGN ENGINEER - CIVIL
L. DEAN
DATE 12/19

NORTH POINT

CITY OF WOLLONGONG
ENGINEERING STANDARD DRAWINGS
TYPICAL FOOTPATH PAVEMENT DETAILS SHEET 2

wollongong city of innovation
DESIGN & TECHNICAL SERVICES Ph. 02 42277111

PJ or TR No. TR-452
SHEET OF SHEETS
DRAWING No. 7000
SHEET No. C22
A3 ORIGINAL
ISSUE A

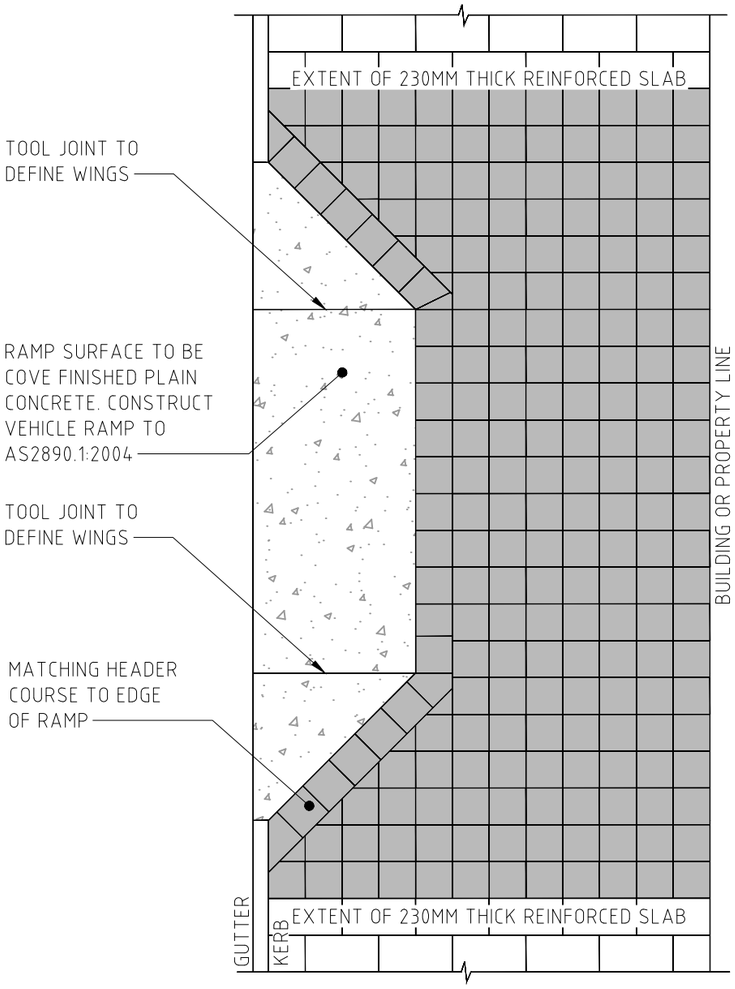

VEHICULAR CROSSING PLAN

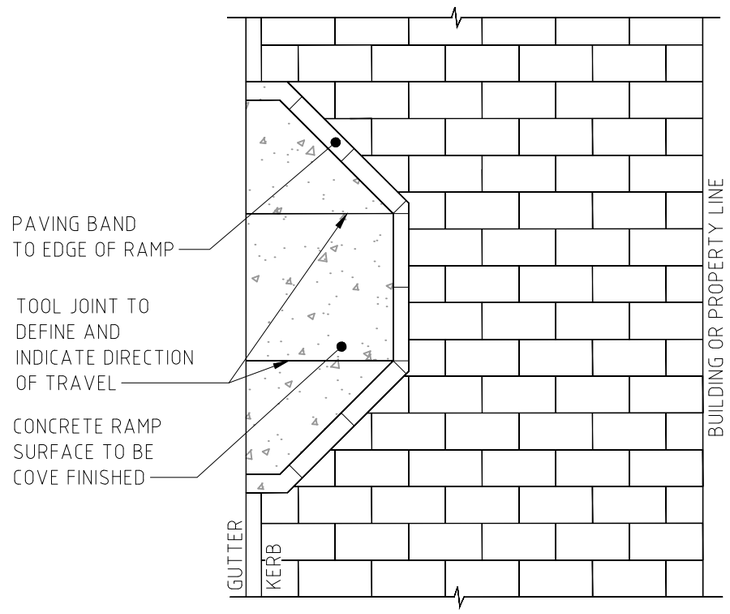

KERB RAMP PLAN

CROSSING - CORE AND CIVIC

SCALE: N.T.S.

PAVEMENT:

VEHICLE CROSSING: MAIN BODY OF PAVEMENT TO BE 'BASALT DARK' BY WILMID PTY LTD (OR APPROVED EQUIVALENT) DARK GREY BASALT WITH AN EXFOLIATED FINISH, 300x300x60mm, LAY PERPENDICULAR TO KERB, MAXIMUM CROSSFALL 2.5%.

PEDESTRIAN RAMP: MAIN BODY OF PAVEMENT TO BE 'BASALT DARK' BY WILMID PTY LTD (OR APPROVED EQUIVALENT) DARK GREY BASALT WITH AN EXFOLIATED FINISH, 300x600x40mm. PAVING BAND TO EDGE OF KERB RAMP 150x600x40mm.

SAMPLES TO BE APPROVED BY WCC PRIOR TO CONSTRUCTION.

SEALANT:

PENETRATING SEALER 'NATURAL PAVING SEALER' BY SPIRIT MARBLE AND TILE CARE PTY LTD (OR APPROVED EQUIVALENT).

STRUCTURAL REQUIREMENTS DRIVEWAY:

SUBBASE	B mm DGB20 COMPACTED TO 98% STANDARD MAXIMUM DRY DENSITY
BASE	D mm THICK N25 CONCRETE REINFORCED WITH SL82 MESH
PAVEMENT	300x300x60mm BASALT PAVING TILES ON 20mm MORTAR BED, GROUT FILLED 3mm MAXIMUM GAPS

STRUCTURAL REQUIREMENTS KERB RAMP:

SUBBASE	Bmm DGB20 COMPACTED TO 98% STANDARD MAXIMUM DRY DENSITY
BASE	Dmm THICK N25 CONCRETE REINFORCED WITH SL82 MESH
PAVEMENT	600x300x40mm BASALT PAVING TILES ON 20mm MORTAR BED, GROUT FILLED 3mm MAXIMUM GAPS
JOINTING	WHERE EXPANSION JOINTS ARE EXPRESSED TO THE SURFACE OR ABUTTING KERBS AND PITS
ISLOATION/ EXPANSION	ABIFLEX OR APPROVED EQUAL WITH CAULKING MATERIAL SIKAFLEX PRO OR APPROVED EQUAL COLOUR: CONCRETE GREY

NOTES:

1. REFER TO WCC CITY CENTRE PUBLIC DOMAIN TECHNICAL MANUAL FOR FURTHER DETAIL RELATING TO CONSTRUCTION IN THE WOLLONGONG CITY CENTRE
2. GREY SHADING INDICATES EXTENT OF 60mm THICK PAVING UNITS
3. REFER TO SLAB AND REINFORCEMENT DETAILS TABLE SHEET C19 FOR DIMENSIONS AND REINFORCEMENT
4. REFER TO C11 FOR KERB RAMP DETAILS

ISSUE	DESCRIPTION	DRAWN	APPR'D	DATE
A	ISSUED FOR INFORMATION	J.M.	L.D.	12/19

DATUM AHD | SURVEYOR | AZIMUTH MGA | FIELD BOOK | RELATED PLANS | SCALE AS NOTED

DRAWN J. MILES DATE 12/19
DESIGNED L. DEAN DATE 12/19
CHECKED L. DEAN DATE 12/19

APPROVED (FOR COUNCIL USE ONLY)
SENIOR DESIGN ENGINEER - CIVIL
L. DEAN
DATE 12/19

NORTH POINT

CITY OF WOLLONGONG

ENGINEERING STANDARD DRAWINGS
TYICAL VEHICULAR CROSSING AND PEDESTRIAN RAMP DETAILS

wollongong city of innovation
DESIGN & TECHNICAL SERVICES
Ph. 02 42277111

PJ or TR No. TR-452
SHEET OF SHEETS
DRAWING No. 7000
SHEET No. C23
A3 ORIGINAL
ISSUE A

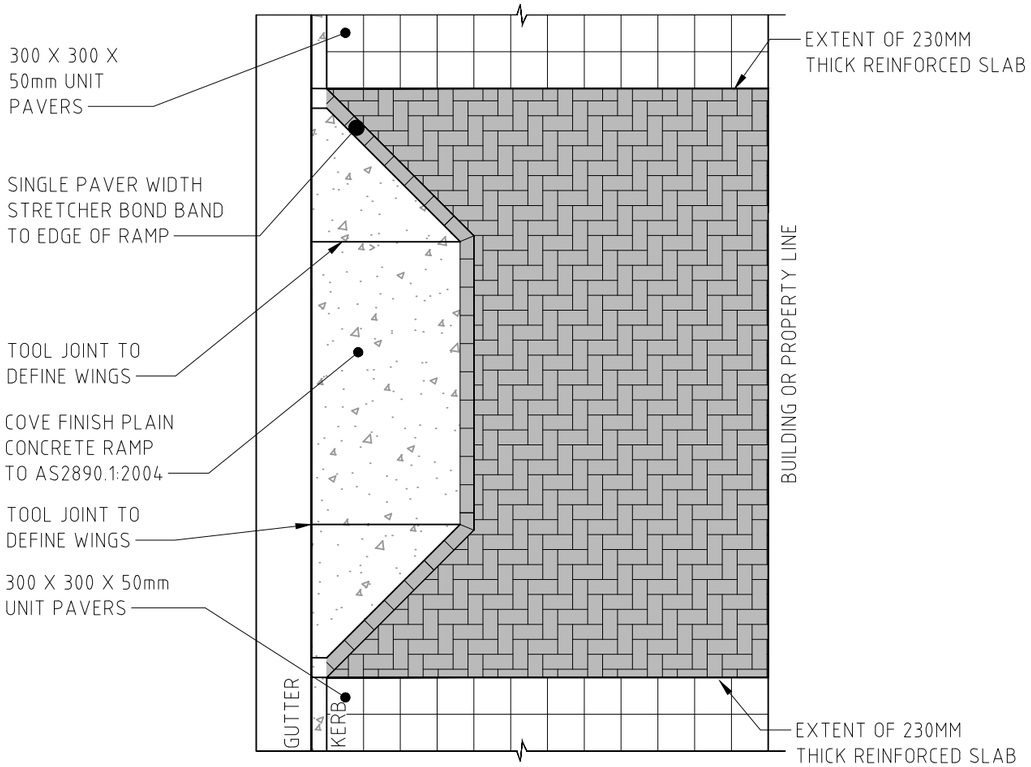

CROSSING- CITY ENTRY AND MINOR CIVIC STREETS

SCALE: N.T.S.

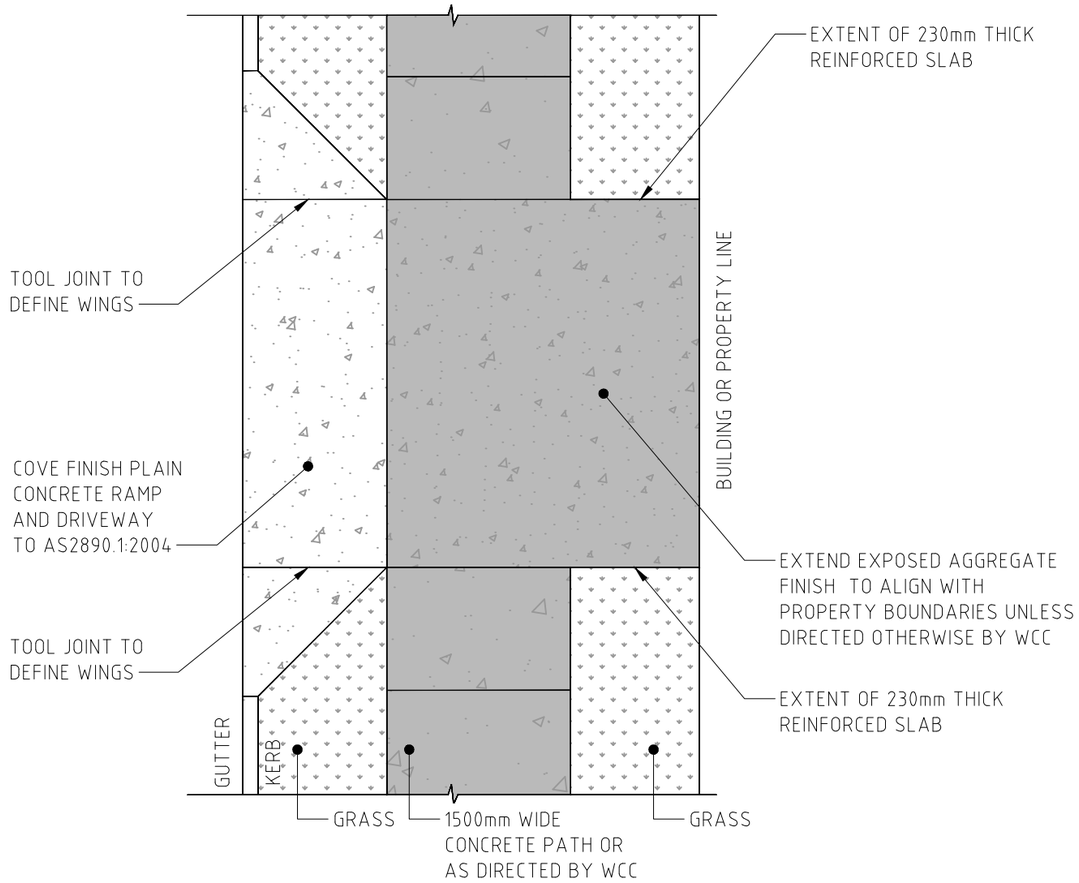

CROSSING-MIXED USE/RESIDENTIAL

SCALE: N.T.S.

PAVEMENT:
DRIVEWAY PAVEMENT TO BE 'TRUPAVE' BY ADBRI MASONRY PTY LTD (OR APPROVED EQUIVALENT)
COLOUR: CHARCOAL, HONED, 230x113x80mm PAVING UNITS IN A HERRINGBONE PATTERN
SAMPLES TO BE APPROVED BY WCC PRIOR TO CONSTRUCTION.

SEALANT:
PENETRATING SEALER 'UNI SEAL' BY SPIRIT MARBLE AND TILE CARE PTY LTD (OR APPROVED EQUIVALENT).

STRUCTURAL REQUIREMENTS:

SUBBASE	B mm DGB20 COMPACTED TO 98% MODIFIED MAXIMUM DRY DENSITY
BASE	D mm THICK N25 CONCRETE REINFORCED WITH SL82 MESH
DRIVEWAY	230x113x80mm CONCRETE UNIT PAVER - HERRINGBONE PATTERN AT 90 DEGREES TO KERB, ON 30mm BEDDING SAND
JOINTING	ABUTTING KERBS, PITS AND BUILDINGS, ABELFLEX OR APPROVED EQUAL WITH SIKAFLEX OR APPROVED
ISOLATION	EQUIVALENT TO MATCH PAVER COLOUR

CONCRETE PAVEMENT:
BLACK OXIDE COLOURED CONCRETE, EXPOSED BLUE METAL AGGREGATE FINISH, UNLESS OTHERWISE DIRECTED BY WCC.

STRUCTURAL REQUIREMENTS:

SUBBASE	B mm DGB20 COMPACTED TO 98% MODIFIED MAXIMUM DRY DENSITY
BASE	D mm THICK N25 CONCRETE REINFORCED WITH SL82 MESH
DRIVEWAY	OXIDE COLOURED EXPOSED AGGREGATE CONCRETE TO MATCH ADJACENT FOOTPATH
JOINTING	ABUTTING KERBS, PITS AND BUILDINGS, ABELFLEX OR APPROVED EQUAL
ISOLATION	WITH SIKAFLEX OR APPROVED EQUAL TO MATCH CONCRETE COLOUR

NOTES:

1. REFER TO WCC CITY CENTRE PUBLIC DOMAIN TECHNICAL MANUAL FOR FURTHER DETAIL RELATING TO CONSTRUCTION IN THE WOLLONGONG CITY CENTRE
2. REFER TO SLAB AND REINFORCEMENT DETAILS TABLE SHEET C19 FOR DIMENSIONS AND REINFORCEMENT

ISSUE	DESCRIPTION	DRAWN	APPR'D	DATE
A	ISSUED FOR INFORMATION	J.M.	L.D.	12/19

DATUM AHD | SURVEYOR | AZIMUTH MGA | FIELD BOOK | RELATED PLANS | SCALE AS NOTED

DRAWN J. MILES DATE 12/19
DESIGNED L. DEAN DATE 12/19
CHECKED L. DEAN DATE 12/19

APPROVED (FOR COUNCIL USE ONLY)
SENIOR DESIGN ENGINEER - CIVIL
L. DEAN
DATE 12/19

ISO 9001 Quality Management

NORTH POINT

CITY OF WOLLONGONG
ENGINEERING STANDARD DRAWINGS
TYPICAL CROSSING DETAILS

wollongong city of innovation
DESIGN & TECHNICAL SERVICES
Ph. 02 42277111

PJ or TR No. TR-452
SHEET OF SHEETS
DRAWING No. 7000
SHEET No. C24
A3 ORIGINAL
ISSUE A

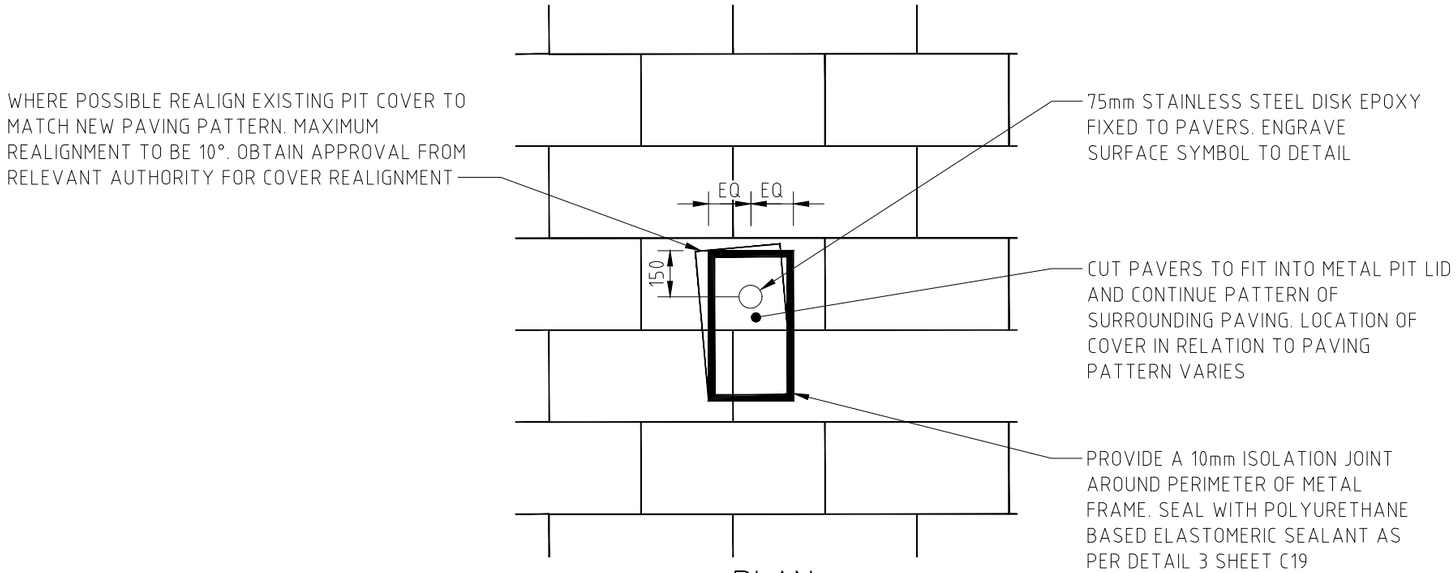

PLAN

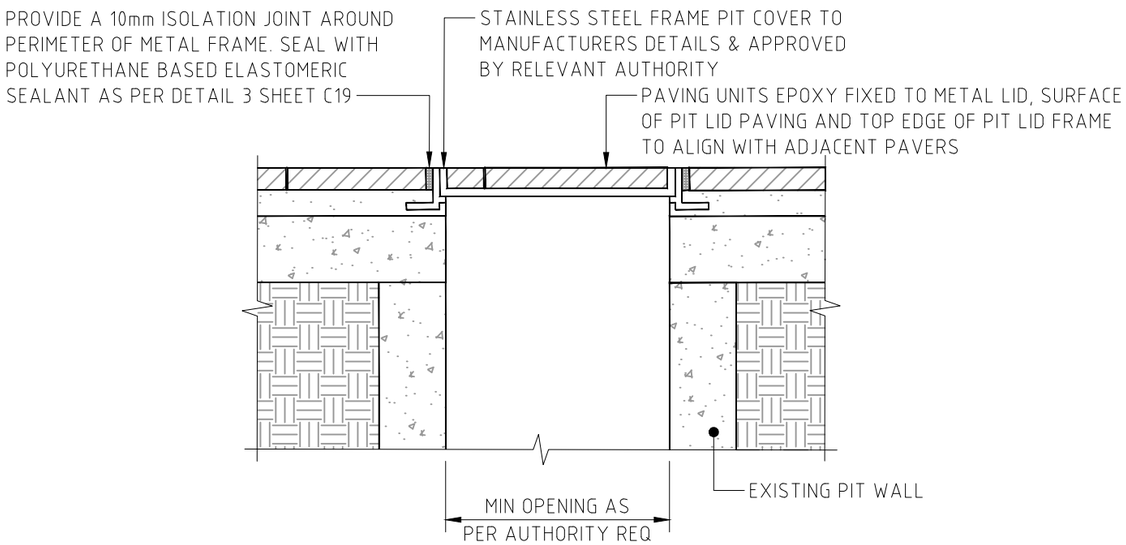

SECTION

SERVICES LIDS IN FOOTWAYS CORE, CIVIC, CITY ENTRY AND MINOR CIVIC STREETS

SCALE: NTS

NOTES:

1. REFER TO WCC CITY CENTRE PUBLIC DOMAIN TECHNICAL MANUAL FOR FURTHER DETAIL RELATING TO CONSTRUCTION IN THE WOLLONGONG CITY CENTRE
2. REFER TO SLAB AND REINFORCEMENT DETAILS TABLE SHEET C19 FOR DIMENSIONS AND REINFORCEMENT
3. REFER TO C11 FOR KERB RAMP DETAILS

ISSUE	DESCRIPTION	DRAWN	APPR'D	DATE
A	ISSUED FOR INFORMATION	J.M.	L.D.	12/19

DATUM AHD | SURVEYOR | AZIMUTH MGA | FIELD BOOK | RELATED PLANS | SCALE AS NOTED

DRAWN J. MILES DATE 12/19
DESIGNED L. DEAN DATE 12/19
CHECKED L. DEAN DATE 12/19

APPROVED (FOR COUNCIL USE ONLY)
SENIOR DESIGN ENGINEER - CIVIL
L. DEAN
DATE 12/19

NORTH POINT

CITY OF WOLLONGONG

ENGINEERING STANDARD DRAWINGS
TYPICAL SERVICE LIDS IN FOOTWAY DETAILS

wollongong city of innovation
DESIGN & TECHNICAL SERVICES
Ph. 02 42277111

PJ or TR No. TR-452
SHEET OF SHEETS
DRAWING No. 7000
SHEET No. C25
ISSUE A
A3 ORIGINAL

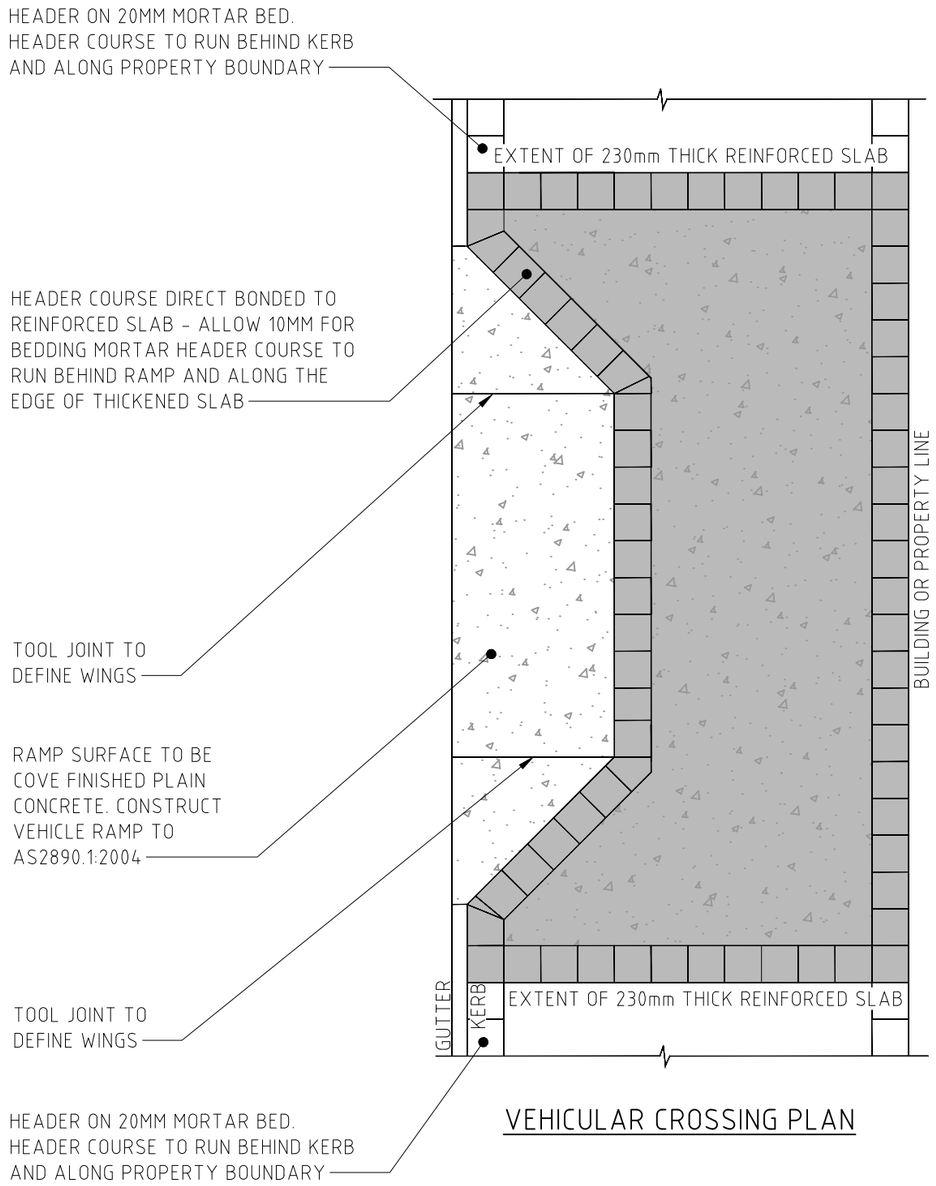

VEHICULAR CROSSING PLAN

CROSSING - WATERFRONT

SCALE: NTS

PAVEMENT:

MAIN BODY OF PAVEMENT IS TO BE QUARTZ/BLUE METAL AGGREGATE CONCRETE WITH A HONED FINISH TO WCC APPROVED METHOD (SEE BELOW). ADJACENT TO COMMERCIAL SITES AND NODAL AREAS, BODY OF PAVEMENT IS TO BE EXPOSED AGGREGATE CONCRETE MIX AS SPECIFIED BY WCC (SEE BELOW).

ON GRADED OR ELEVATED PATHS, THE MAIN BODY OF PAVEMENT IS TO BE URBANSTONE (OR APPROVED EQUAL)
300 X 300 X 60mm ALBANY GREY, SHOTBLAST FINISH.
HEADER COURSE TO BE URBANSTONE (OR APPROVED EQUAL) 300 X 300 X 60mm GOLDEN GUNMETAL MILLED FINISH. SAMPLES TO BE APPROVED BY WCC MANAGER PROJECT DELIVERY PRIOR TO CONSTRUCTION.

SEALANT:

PENETRATING SEALER 'SPIRIT PREMIUM SEAL' BY SPIRIT MARBLE AND TILE CARE PTY LTD (OR APPROVED EQUIVALENT).

STRUCTURAL DESIGN REQUIREMENTS:

SUBBASE	B mm DGB20 COMPACTED TO 98% STANDARD MAXIMUM DRY DENSITY
PAVEMENT	HONED CONCRETE/EXPOSED AGGREGATE AS DIRECTED BY WCC D mm THICK N25 CONCRETE REINFORCED WITH SL82 MESH
CONCRETE MIX	1300KG ROCK/CUBIC METRE, 25% BLUE METAL 10MM, 25% BLUE METAL 20MM, 50% QUARTZ 10MM
HEADER COURSE	300 X 300 X 60mm CONCRETE UNIT PAVER ON 10MM LACTICRETE ADHESIVE BED (OR APPROVED EQUAL) WITH GROUT FILLED 3MM MAXIMUM VERTICAL GAPS, COLOUR TO MATCH PAVERS
JOINTING	EXPANSION - ADJACENT TO PERPENDICULAR BANDS CONTRACTION - SAWCUT HALFWAY BETWEEN PERPENDICULAR BANDS ISOLATION - ABUTTING KERBS, PITS AND BUILDINGS ABELFLEX OR APPROVED EQUAL WITH SIKAFLEX OR APPROVED EQUAL TO MATCH PAVER COLOUR. RE ENTRANT CORNERS TRIMMING - 2 X N12 TRIMMER BARS, MINIMUM 800MM LENGTH AT ALL DIAGONAL CORNERS

NOTES:

1. REFER TO WCC CITY CENTRE PUBLIC DOMAIN TECHNICAL MANUAL FOR FURTHER DETAIL RELATING TO CONSTRUCTION IN THE WOLLONGONG CITY CENTRE
2. REFER TO SLAB AND REINFORCEMENT DETAILS TABLE SHEET C19 FOR DIMENSIONS AND REINFORCEMENT

ISSUE	DESCRIPTION	DRAWN	APPR'D	DATE
A	ISSUED FOR INFORMATION	J.M.	L.D.	12/19

DATUM AHD | SURVEYOR | AZIMUTH MGA | FIELD BOOK | RELATED PLANS | SCALE AS NOTED

DRAWN J. MILES DATE 12/19
DESIGNED L. DEAN DATE 12/19
CHECKED L. DEAN DATE 12/19

APPROVED (FOR COUNCIL USE ONLY)
SENIOR DESIGN ENGINEER - CIVIL
L. DEAN
DATE 12/19

NORTH POINT

CITY OF WOLLONGONG
ENGINEERING STANDARD DRAWINGS
TYPICAL CROSSING DETAILS
WATERFRONT

wollongong city of innovation
DESIGN & TECHNICAL SERVICES
Ph. 02 42277111

PJ or TR No. TR-452
SHEET OF SHEETS
DRAWING No. 7000
SHEET No. C26
A3 ORIGINAL
ISSUE A

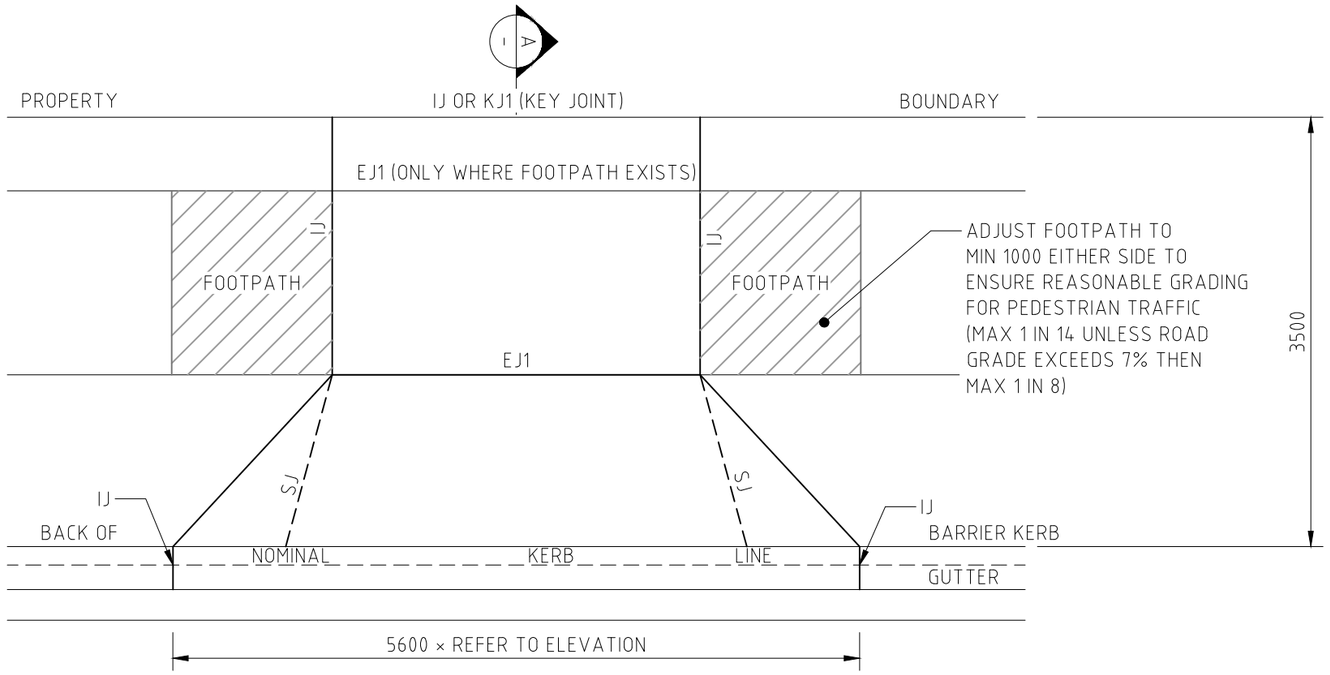

PLAN

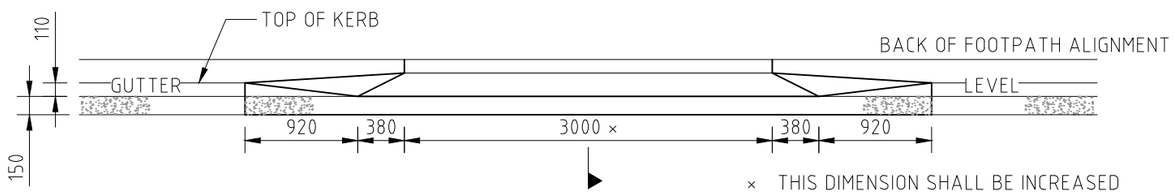

ELEVATION

× THIS DIMENSION SHALL BE INCREASED FOR WIDER APPROVED CROSSINGS

NOTES:

1. FOR PUBLIC DOMAIN AREAS REFER TO PUBLIC DOMAIN TECHNICAL MANUAL FOR ADVICE REGARDING STRUCTURAL DESIGN AND WEARING SURFACE REQUIREMENTS.
2. FOR JOINT TYPES REFER TO C19 & C20
3. ALL DIMENSIONS IN MILLIMETRES UNLESS OTHERWISE SHOWN

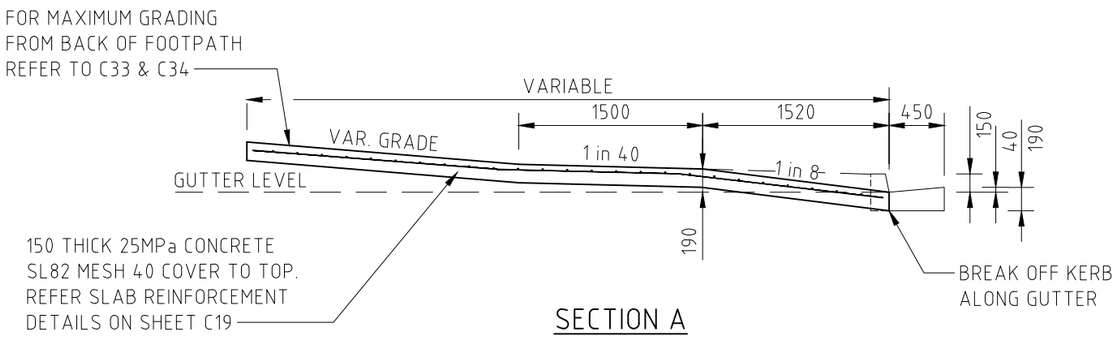

SECTION A

150mm HIGH KERB

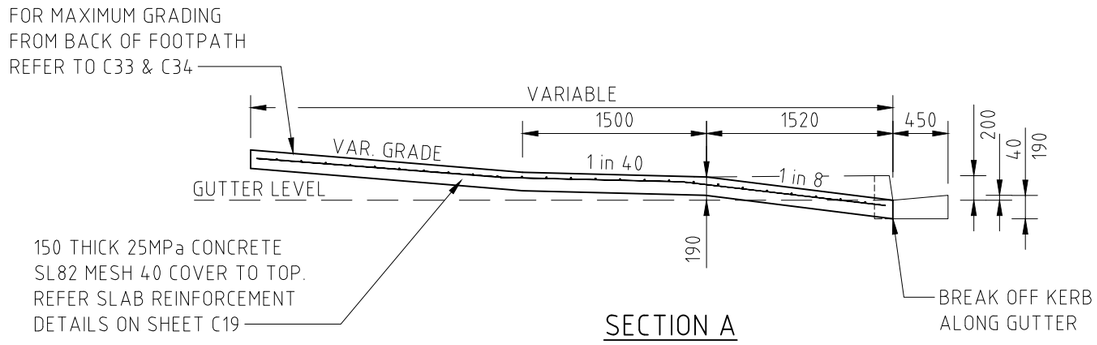

SECTION A

200mm HIGH KERB

ISSUE	DESCRIPTION	DRAWN	APPR'D	DATE
A	ISSUED FOR INFORMATION	J.M.	L.D.	12/19

DATUM AHD | SURVEYOR
AZIMUTH MGA | FIELD BOOK
RELATED PLANS
SCALE AS NOTED

DRAWN J. MILES DATE 12/19
DESIGNED L. DEAN DATE 12/19
CHECKED L. DEAN DATE 12/19

APPROVED (FOR COUNCIL USE ONLY)
SENIOR DESIGN ENGINEER - CIVIL
L. DEAN
DATE 12/19

NORTH POINT

CITY OF WOLLONGONG
ENGINEERING STANDARD DRAWINGS
VEHICULAR CROSSING DETAILS
RESIDENTIAL TYPE - BARRIER KERB

wollongong city of innovation
DESIGN & TECHNICAL SERVICES
Ph. 02 42277111

PJ or TR No. TR-452
SHEET OF SHEETS
DRAWING No. 7000
SHEET No. C30
A3 ORIGINAL
ISSUE A

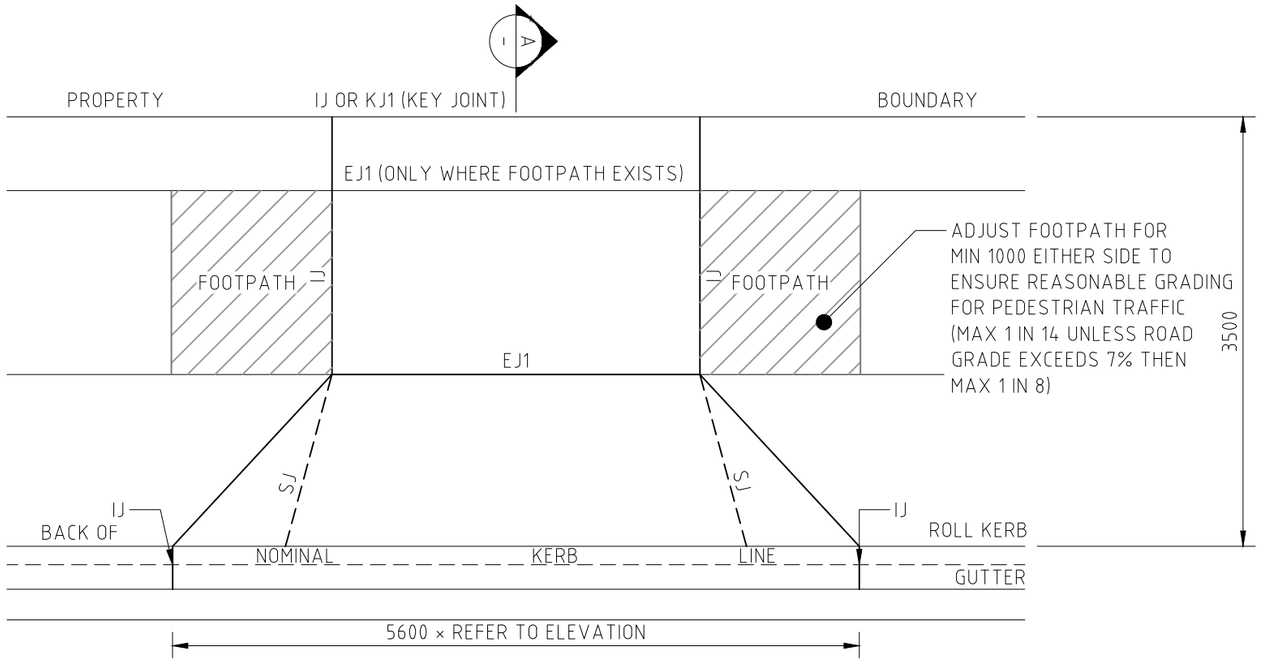

PLAN

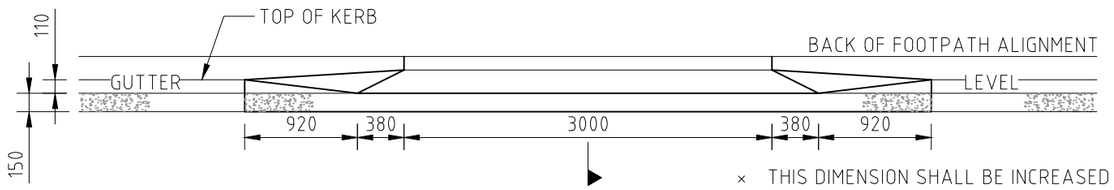

ELEVATION

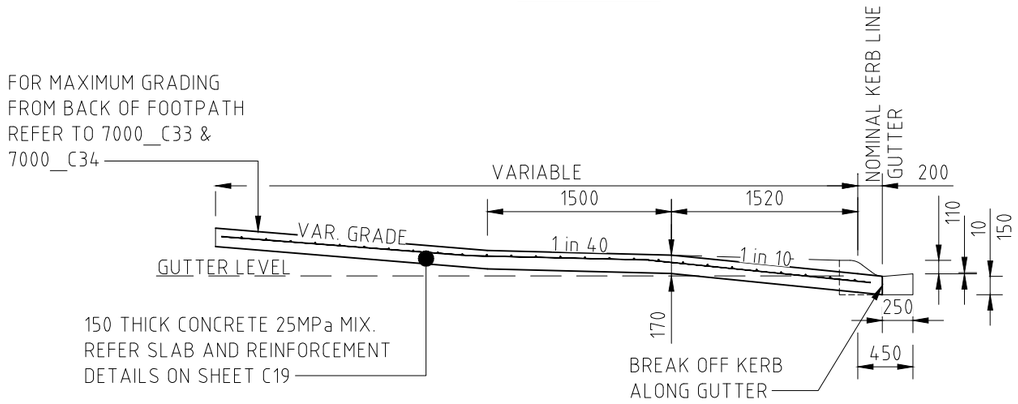

SECTION A

ROLL KERB AND GUTTER

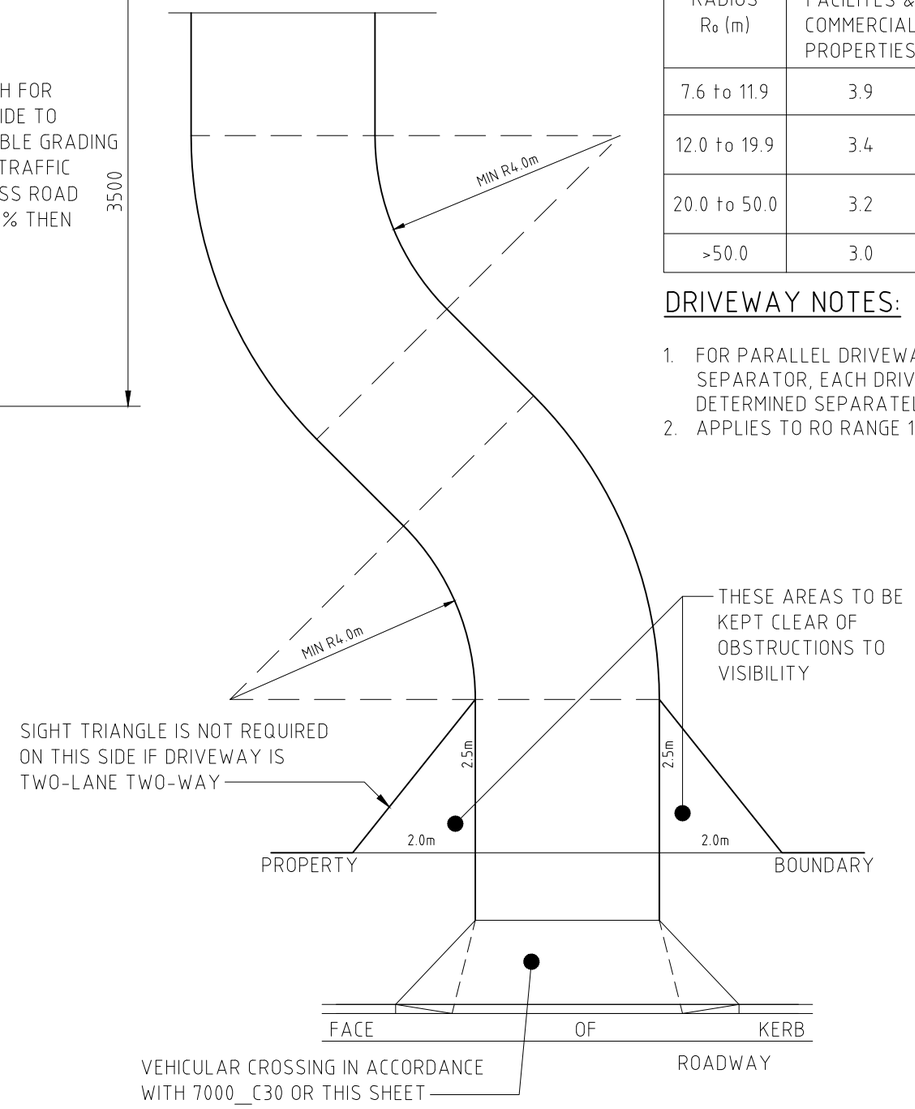

MINIMUM WIDTHS ON CURVED DRIVEWAYS

OUTSIDE TURN RADIUS R_o (m)	SINGLE LANE		TWO-WAY, NO SEPARATOR ALL CASES (NOTE 1)
	PUBLIC FACILITES & COMMERCIAL PROPERTIES	DOMESTIC PROPERTIES	
7.6 to 11.9	3.9	3.6	-
12.0 to 19.9	3.4	3.1	6.7 (NOTE 2)
20.0 to 50.0	3.2	3.0	6.3
>50.0	3.0	3.0	5.5

DRIVEWAY NOTES:

1. FOR PARALLEL DRIVEWAYS WITH A MEDIAN OR SEPARATOR, EACH DRIVEWAY WIDTH SHALL BE DETERMINED SEPARATELY AS A SINGLE LANE
2. APPLIES TO RO RANGE 15.0m TO 19.9m ONLY

NOTES:

1. FOR PUBLIC DOMAIN AREAS REFER TO PUBLIC DOMAIN TECHNICAL MANUAL FOR ADVICE REGARDING STRUCTURAL DESIGN AND WEARING SURFACE REQUIREMENTS.
2. ROLL KERB AND GUTTER IS NOT TO BE USED FOR NEW INSTALLATIONS. IT IS INCLUDED IN THESE DRAWINGS TO DEMONSTRATE DRIVEWAY CONSTRUCTION REQUIREMENTS FOR EXISTING ROLL KERB AND GUTTER INSTALLATIONS.
3. FOR JOINT TYPES REFER TO DRAWING 7000_C19 & C20

ISSUE	DESCRIPTION	DRAWN	APPR'D	DATE
A	ISSUED FOR INFORMATION	J.M.	L.D.	12/19

DATUM AHD | SURVEYOR | AZIMUTH MGA | FIELD BOOK | RELATED PLANS | SCALE AS NOTED

DRAWN J. MILES DATE 12/19
DESIGNED L. DEAN DATE 12/19
CHECKED L. DEAN DATE 12/19

APPROVED (FOR COUNCIL USE ONLY)
SENIOR DESIGN ENGINEER - CIVIL
L. DEAN
DATE 12/19

NORTH POINT

CITY OF WOLLONGONG

ENGINEERING STANDARD DRAWINGS
VEHICULAR CROSSING DETAILS
RESIDENTIAL TYPE - ROLL KERB
& MINIMUM DRIVEWAY DIMENSIONS

wollongong city of innovation
DESIGN & TECHNICAL SERVICES
Ph. 02 42277111

PJ or TR No. TR-452
SHEET OF SHEETS
A3 ORIGINAL
DRAWING No. 7000
SHEET No. C31
ISSUE A

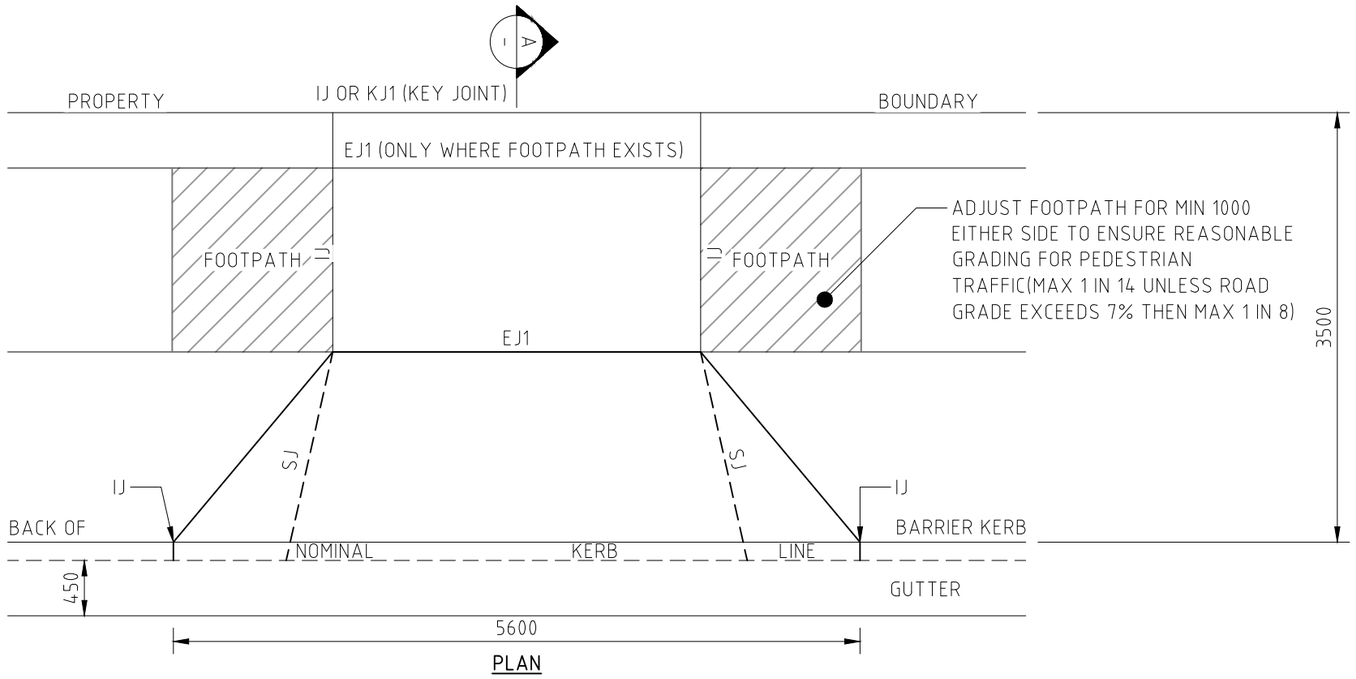

PLAN

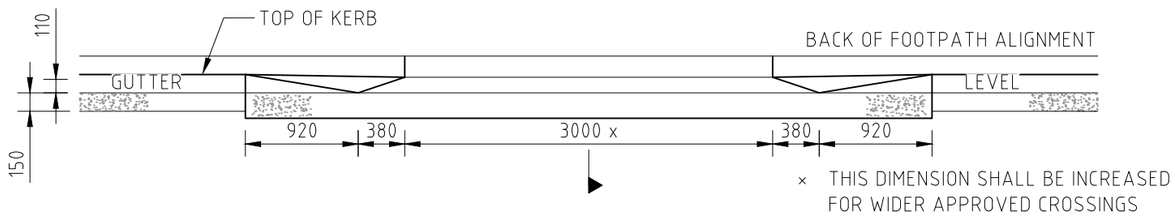

ELEVATION

NOTES:

1. FOR JOINT TYPES REFER TO DRAWING 7000_C19 & C20
2. ALL DIMENSIONS IN MILLIMETRES UNLESS OTHERWISE SHOWN

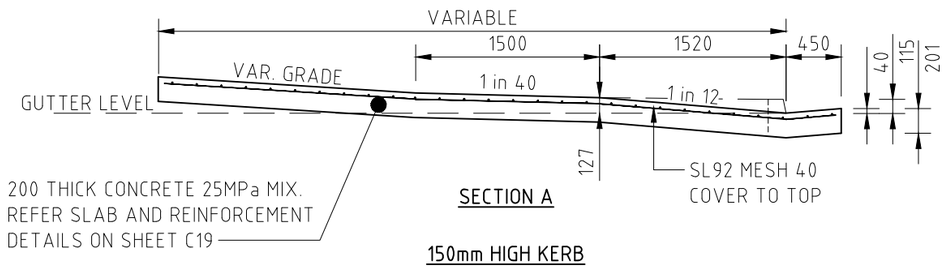

SECTION A

150mm HIGH KERB

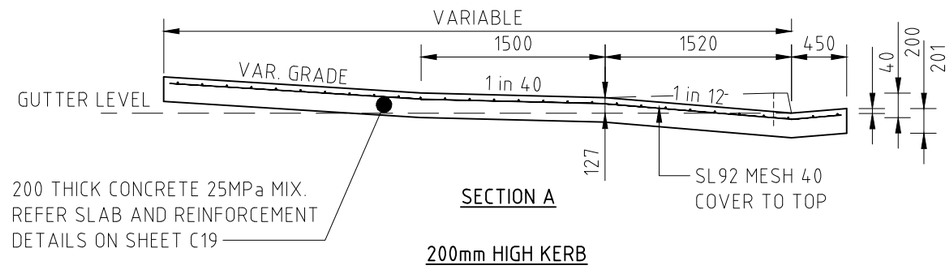

SECTION A

200mm HIGH KERB

ISSUE	DESCRIPTION	DRAWN	APPR'D	DATE
A	ISSUED FOR INFORMATION	J.M.	L.D.	12/19

DATUM AHD | SURVEYOR | AZIMUTH MGA | FIELD BOOK | RELATED PLANS | SCALE AS NOTED

DRAWN J. MILES DATE 12/19
DESIGNED L. DEAN DATE 12/19
CHECKED L. DEAN DATE 12/19

APPROVED (FOR COUNCIL USE ONLY)
SENIOR DESIGN ENGINEER - CIVIL
L. DEAN
DATE 12/19

NORTH POINT

CITY OF WOLLONGONG

ENGINEERING STANDARD DRAWINGS
VEHICULAR CROSSING DETAILS
INDUSTRIAL TYPE

wollongong city of innovation
DESIGN & TECHNICAL SERVICES
Ph. 02 42277111

PJ or TR No. TR-452
SHEET OF SHEETS
DRAWING No. 7000
SHEET No. C32
A3 ORIGINAL
ISSUE A

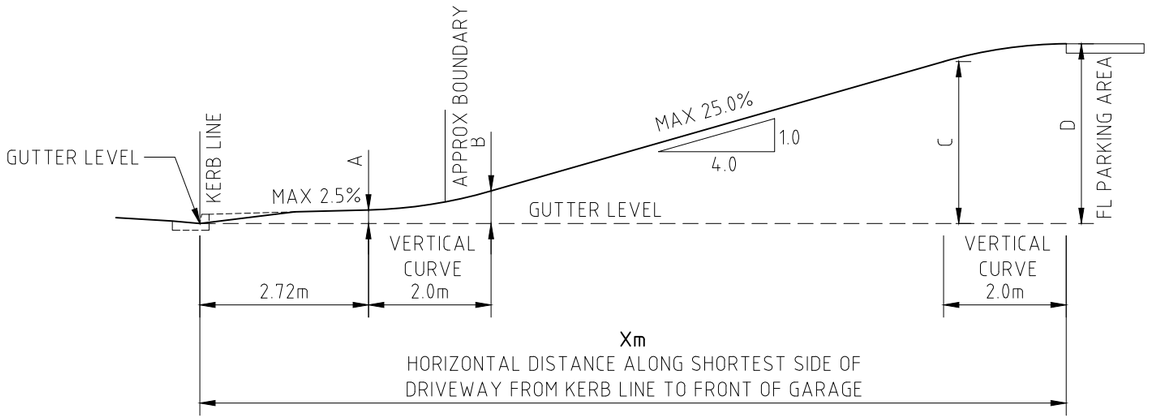

Xm	HEIGHT ABOVE GUTTER (METRES)			
	A	B	C	D
9.0	0.22	0.53	1.09	1.38
9.5	0.22	0.53	1.22	1.51
10.0	0.22	0.53	1.34	1.63
10.5	0.22	0.53	1.47	1.76
11.0	0.22	0.53	1.59	1.88
11.5	0.22	0.53	1.72	2.01
12.0	0.22	0.53	1.84	2.13
12.5	0.22	0.53	1.97	2.26
13.0	0.22	0.53	2.09	2.38
13.5	0.22	0.53	2.22	2.51
14.0	0.22	0.53	2.34	2.63
14.5	0.22	0.53	2.47	2.76
15.0	0.22	0.53	2.59	2.88
15.5	0.22	0.53	2.72	3.01
16.0	0.22	0.53	2.84	3.13
16.5	0.22	0.53	2.97	3.26
17.0	0.22	0.53	3.09	3.38
17.5	0.22	0.53	3.22	3.51
18.0	0.22	0.53	3.34	3.63
18.5	0.22	0.53	3.47	3.76
19.0	0.22	0.53	3.59	3.88
19.5	0.22	0.53	3.72	4.01

Xm	HEIGHT ABOVE GUTTER (METRES)			
	A	B	C	D
20.0	0.22	0.53	3.84	4.13
20.5	0.22	0.53	3.97	4.26
21.0	0.22	0.53	4.09	4.38
21.5	0.22	0.53	4.22	4.51
22.0	0.22	0.53	4.34	4.63
22.5	0.22	0.53	4.47	4.76
23.0	0.22	0.53	4.59	4.88
23.5	0.22	0.53	4.72	5.01
24.0	0.22	0.53	4.84	5.13
24.5	0.22	0.53	4.97	5.26
25.0	0.22	0.53	5.09	5.38
25.5	0.22	0.53	5.22	5.51
26.0	0.22	0.53	5.34	5.63
26.5	0.22	0.53	5.47	5.76
27.0	0.22	0.53	5.59	5.88
27.5	0.22	0.53	5.72	6.01
28.0	0.22	0.53	5.84	6.13
28.5	0.22	0.53	5.97	6.26
29.0	0.22	0.53	6.09	6.38
29.5	0.22	0.53	6.22	6.51
30.0	0.22	0.53	6.34	6.63
30.5	0.22	0.53	6.47	6.76

HIGH SIDE PROPERTIES

WHERE DRIVEWAYS ADJOIN ROLL KERB AND GUTTER DEDUCT 0.02m FROM ALL HEIGHTS

FOR INTERMEDIATE DISTANCES HEIGHTS C & D CAN BE CALCULATED USING THE FOLLOWING FORMULAE:

C = (0.25 x Xm) - 1.16 D = (0.25 x Xm) - 0.87

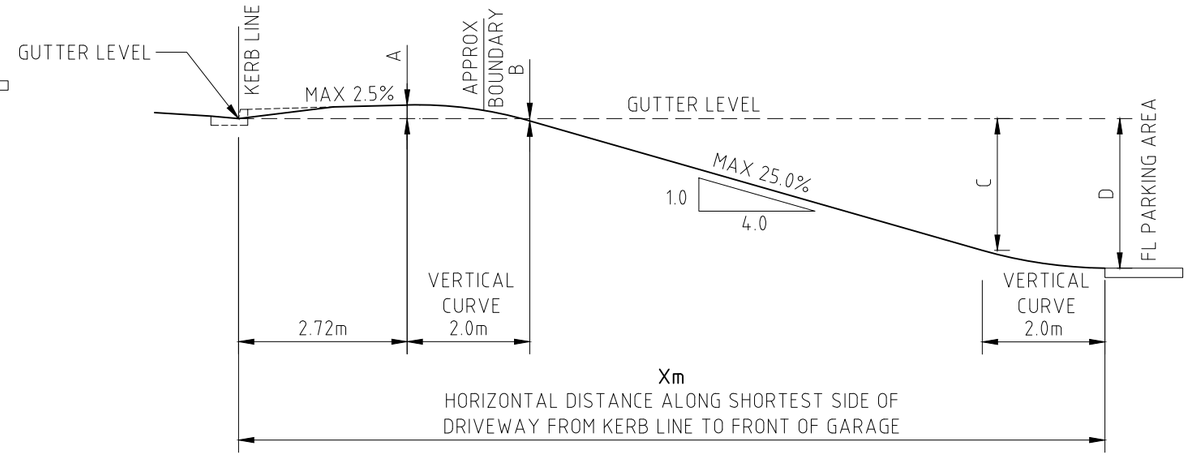

Xm	HEIGHT ABOVE GUTTER (METRES)			
	A	B	C	D
9.0	0.22	-0.04	-0.60	-0.88
9.5	0.22	-0.04	-0.73	-1.01
10.0	0.22	-0.04	-0.85	-1.13
10.5	0.22	-0.04	-0.98	-1.26
11.0	0.22	-0.04	-1.10	-1.38
11.5	0.22	-0.04	-1.23	-1.51
12.0	0.22	-0.04	-1.35	-1.63
12.5	0.22	-0.04	-1.48	-1.76
13.0	0.22	-0.04	-1.60	-1.88
13.5	0.22	-0.04	-1.73	-2.01
14.0	0.22	-0.04	-1.85	-2.13
14.5	0.22	-0.04	-1.98	-2.26
15.0	0.22	-0.04	-2.10	-2.38
15.5	0.22	-0.04	-2.23	-2.51
16.0	0.22	-0.04	-2.35	-2.63
16.5	0.22	-0.04	-2.48	-2.76
17.0	0.22	-0.04	-2.60	-2.88
17.5	0.22	-0.04	-2.73	-3.01
18.0	0.22	-0.04	-2.85	-3.13
18.5	0.22	-0.04	-2.98	-3.26
19.0	0.22	-0.04	-3.10	-3.38
19.5	0.22	-0.04	-3.23	-3.51

Xm	HEIGHT ABOVE GUTTER (METRES)			
	A	B	C	D
20.0	0.22	-0.04	-3.35	-3.63
20.5	0.22	-0.04	-3.48	-3.76
21.0	0.22	-0.04	-3.60	-3.88
21.5	0.22	-0.04	-3.73	-4.01
22.0	0.22	-0.04	-3.85	-4.13
22.5	0.22	-0.04	-3.98	-4.26
23.0	0.22	-0.04	-4.10	-4.38
23.5	0.22	-0.04	-4.23	-4.51
24.0	0.22	-0.04	-4.35	-4.63
24.5	0.22	-0.04	-4.48	-4.76
25.0	0.22	-0.04	-4.60	-4.88
25.5	0.22	-0.04	-4.73	-5.01
26.0	0.22	-0.04	-4.85	-5.13
26.5	0.22	-0.04	-4.98	-5.26
27.0	0.22	-0.04	-5.10	-5.38
27.5	0.22	-0.04	-5.23	-5.51
28.0	0.22	-0.04	-5.35	-5.63
28.5	0.22	-0.04	-5.48	-5.76
29.0	0.22	-0.04	-5.60	-5.88
29.5	0.22	-0.04	-5.73	-6.01
30.0	0.22	-0.04	-5.85	-6.13
30.5	0.22	-0.04	-5.98	-6.26

LOW SIDE PROPERTIES

WHERE DRIVEWAYS ADJOIN ROLL KERB AND GUTTER DEDUCT 0.02m FROM ALL HEIGHTS

FOR INTERMEDIATE DISTANCES HEIGHTS C & D CAN BE CALCULATED USING THE FOLLOWING FORMULAE:

C = -(0.25 x Xm) + 1.65 D = -(0.25 x Xm) + 1.37

ISSUE	DESCRIPTION	DRAWN	APPR'D	DATE
A	ISSUED FOR INFORMATION	J.M.	L.D.	12/19

DATUM AHD | SURVEYOR | AZIMUTH MGA | FIELD BOOK | RELATED PLANS | SCALE AS NOTED

DRAWN J. MILES DATE 12/19
DESIGNED L. DEAN DATE 12/19
CHECKED L. DEAN DATE 12/19

APPROVED (FOR COUNCIL USE ONLY)
SENIOR DESIGN ENGINEER - CIVIL
L. DEAN
DATE 12/19

NORTH POINT

CITY OF WOLLONGONG

ENGINEERING STANDARD DRAWINGS
MAXIMUM INTERNAL GRADING
DOMESTIC DWELLINGS

wollongong city of innovation
DESIGN & TECHNICAL SERVICES
Ph. 02 42277111

PJ or TR No. TR-452
SHEET OF SHEETS
DRAWING No. 7000
SHEET No. C33
ISSUE A
A3 ORIGINAL

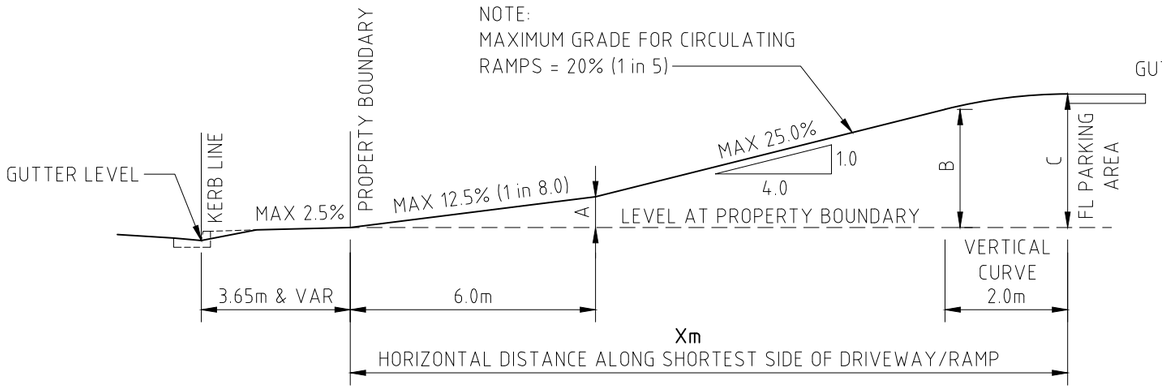

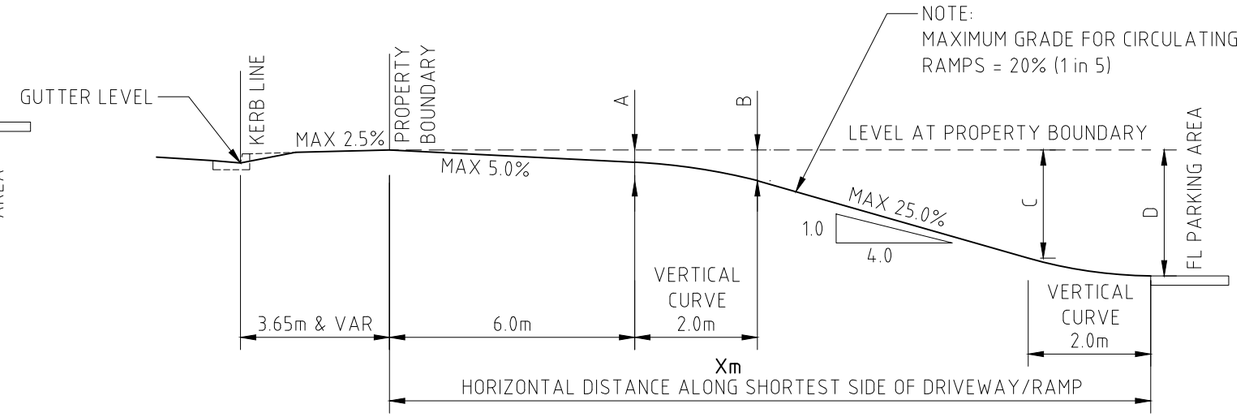

Xm	HEIGHT ABOVE PROPERTY BOUNDARY LEVEL (METRES)		
	A	B	C
3.0	0.38	-	0.38
3.5	0.44	-	0.44
4.0	0.50	-	0.50
4.5	0.56	-	0.56
5.0	0.63	-	0.63
5.5	0.69	-	0.69
6.0	0.75	-	0.75
6.5	0.75	-	0.81
7.0	0.75	-	0.88
7.5	0.75	-	0.94
8.0	0.75	0.75	1.00
8.5	0.75	0.88	1.13
9.0	0.75	1.00	1.25
9.5	0.75	1.13	1.38
10.0	0.75	1.25	1.50
10.5	0.75	1.38	1.63
11.0	0.75	1.50	1.75
11.5	0.75	1.63	1.88
12.0	0.75	1.75	2.00
12.5	0.75	1.88	2.13
13.0	0.75	2.00	2.25
13.5	0.75	2.13	2.38

Xm	HEIGHT ABOVE PROPERTY BOUNDARY LEVEL (METRES)		
	A	B	C
14.0	0.75	2.25	2.50
14.5	0.75	2.38	2.63
15.0	0.75	2.50	2.75
15.5	0.75	2.63	2.88
16.0	0.75	2.75	3.00
16.5	0.75	2.88	3.13
17.0	0.75	3.00	3.25
17.5	0.75	3.13	3.38
18.0	0.75	3.25	3.50
18.5	0.75	3.38	3.63
19.0	0.75	3.50	3.75
19.5	0.75	3.63	3.88
20.0	0.75	3.75	4.00
20.5	0.75	3.88	4.13
21.0	0.75	4.00	4.25
21.5	0.75	4.13	4.38
22.0	0.75	4.25	4.50
22.5	0.75	4.38	4.63
23.0	0.75	4.50	4.75
23.5	0.75	4.63	4.88
24.0	0.75	4.75	5.00
24.5	0.75	4.88	5.13

HIGH SIDE PROPERTIES

FOR INTERMEDIATE DISTANCES OF Xm > 8.0m HEIGHTS B & C CAN BE CALCULATED USING THE FOLLOWING FORMULAE:

B = (0.25 x Xm) - 1.25 C = (0.25 x Xm) - 1.0

Xm	HEIGHT ABOVE PROPERTY BOUNDARY LEVEL (METRES)			
	A	B	C	D
3.0	-0.15	-	-	-0.15
3.5	-0.18	-	-	-0.18
4.0	-0.20	-	-	-0.20
4.5	-0.23	-	-	-0.23
5.0	-0.25	-	-	-0.25
5.5	-0.28	-	-	-0.28
6.0	-0.30	-	-	-0.30
6.5	-0.30	-	-	-0.33
7.0	-0.30	-	-	-0.38
7.5	-0.30	-	-	-0.43
8.0	-0.30	-	-	-0.55
8.5	-0.30	-	-0.35	-0.60
9.0	-0.30	-0.41	-0.41	-0.66
9.5	-0.30	-0.48	-0.48	-0.73
10.0	-0.30	-0.60	-0.60	-0.85
10.5	-0.30	-0.60	-0.73	-0.97
11.0	-0.30	-0.60	-0.85	-1.10
11.5	-0.30	-0.60	-0.97	-1.22
12.0	-0.30	-0.60	-1.10	-1.35
12.5	-0.30	-0.60	-1.22	-1.47
13.0	-0.30	-0.60	-1.35	-1.60
13.5	-0.30	-0.60	-1.47	-1.72

Xm	HEIGHT ABOVE PROPERTY BOUNDARY LEVEL (METRES)			
	A	B	C	D
14.0	-0.30	-0.60	-1.60	-1.85
14.5	-0.30	-0.60	-1.72	-1.97
15.0	-0.30	-0.60	-1.85	-2.10
15.5	-0.30	-0.60	-1.97	-2.22
16.0	-0.30	-0.60	-2.10	-2.35
16.5	-0.30	-0.60	-2.22	-2.47
17.0	-0.30	-0.60	-2.35	-2.60
17.5	-0.30	-0.60	-2.47	-2.72
18.0	-0.30	-0.60	-2.60	-2.85
18.5	-0.30	-0.60	-2.72	-2.97
19.0	-0.30	-0.60	-2.85	-3.10
19.5	-0.30	-0.60	-2.97	-3.22
20.0	-0.30	-0.60	-3.10	-3.35
20.5	-0.30	-0.60	-3.22	-3.47
21.0	-0.30	-0.60	-3.35	-3.60
21.5	-0.30	-0.60	-3.47	-3.72
22.0	-0.30	-0.60	-3.60	-3.85
22.5	-0.30	-0.60	-3.72	-3.97
23.0	-0.30	-0.60	-3.85	-4.10
23.5	-0.30	-0.60	-3.97	-4.22
24.0	-0.30	-0.60	-4.10	-4.35
24.5	-0.30	-0.60	-4.22	-4.47

LOW SIDE PROPERTIES

FOR INTERMEDIATE DISTANCES OF Xm > 10.0m HEIGHTS C & D CAN BE CALCULATED USING THE FOLLOWING FORMULAE:

C = -(0.25 x Xm) + 1.9 D = (0.25 x Xm) + 1.65

ISSUE	DESCRIPTION	DRAWN	APPR'D	DATE
A	ISSUED FOR INFORMATION	J.M.	L.D.	12/19

DATUM AHD | SURVEYOR
AZIMUTH MGA | FIELD BOOK
RELATED PLANS
SCALE AS NOTED

DRAWN J. MILES DATE 12/19
DESIGNED L. DEAN DATE 12/19
CHECKED L. DEAN DATE 12/19

APPROVED (FOR COUNCIL USE ONLY)
SENIOR DESIGN ENGINEER - CIVIL
L. DEAN
DATE 12/19

NORTH POINT

CITY OF WOLLONGONG
ENGINEERING STANDARD DRAWINGS
MAXIMUM INTERNAL GRADING UNITS AND COMMERCIAL DEVELOPMENTS

wollongong city of innovation
DESIGN & TECHNICAL SERVICES
Ph. 02 42277111

PJ or TR No. TR-452
SHEET OF SHEETS
DRAWING No. 7000
SHEET No. C34
A3 ORIGINAL
ISSUE A

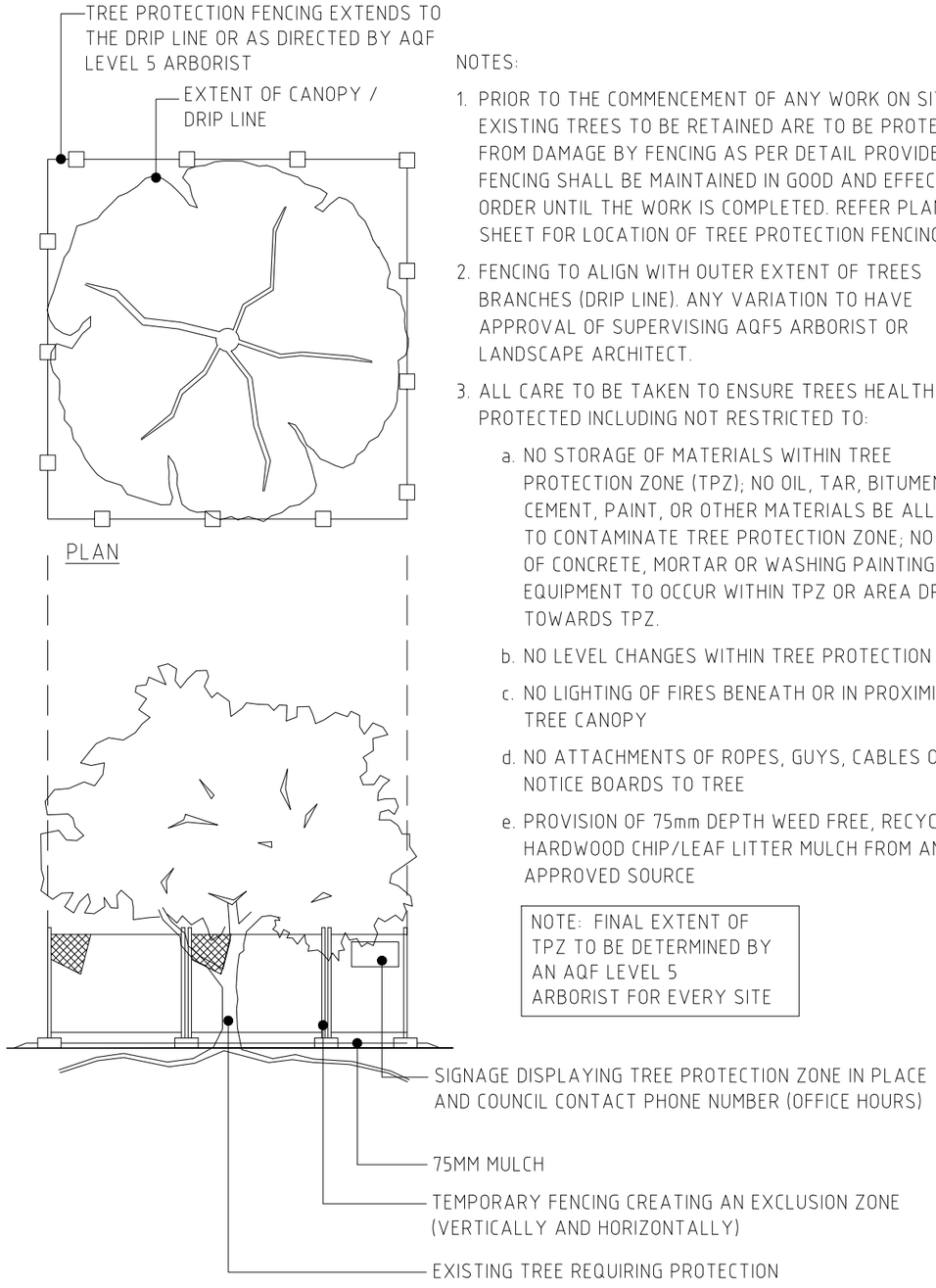

NOTES:

1. PRIOR TO THE COMMENCEMENT OF ANY WORK ON SITE, EXISTING TREES TO BE RETAINED ARE TO BE PROTECTED FROM DAMAGE BY FENCING AS PER DETAIL PROVIDED. FENCING SHALL BE MAINTAINED IN GOOD AND EFFECTIVE ORDER UNTIL THE WORK IS COMPLETED. REFER PLAN THIS SHEET FOR LOCATION OF TREE PROTECTION FENCING.
2. FENCING TO ALIGN WITH OUTER EXTENT OF TREES BRANCHES (DRIP LINE). ANY VARIATION TO HAVE APPROVAL OF SUPERVISING AQF5 ARBORIST OR LANDSCAPE ARCHITECT.
3. ALL CARE TO BE TAKEN TO ENSURE TREES HEALTH IS PROTECTED INCLUDING NOT RESTRICTED TO:
   a. NO STORAGE OF MATERIALS WITHIN TREE PROTECTION ZONE (TPZ); NO OIL, TAR, BITUMEN, CEMENT, PAINT, OR OTHER MATERIALS BE ALLOWED TO CONTAMINATE TREE PROTECTION ZONE; NO MIXING OF CONCRETE, MORTAR OR WASHING PAINTING EQUIPMENT TO OCCUR WITHIN TPZ OR AREA DRAINING TOWARDS TPZ.
   b. NO LEVEL CHANGES WITHIN TREE PROTECTION ZONE
   c. NO LIGHTING OF FIRES BENEATH OR IN PROXIMITY TO TREE CANOPY
   d. NO ATTACHMENTS OF ROPES, GUYS, CABLES OR NOTICE BOARDS TO TREE
   e. PROVISION OF 75mm DEPTH WEED FREE, RECYCLED HARDWOOD CHIP/LEAF LITTER MULCH FROM AN APPROVED SOURCE

NOTE: FINAL EXTENT OF TPZ TO BE DETERMINED BY AN AQF LEVEL 5 ARBORIST FOR EVERY SITE

DETAIL A
TYPICAL TREE PROTECTION ZONE (TPZ) FENCING DETAIL
(REFERENCE AS 4790)

HOLD POINT
NO EXCAVATION IS TO OCCUR WITHIN THE TREE PROTECTION ZONE. STOP WORK AND CONTACT AN AQF LEVEL 5 ARBORIST BEFORE PROCEEDING ANY FURTHER.

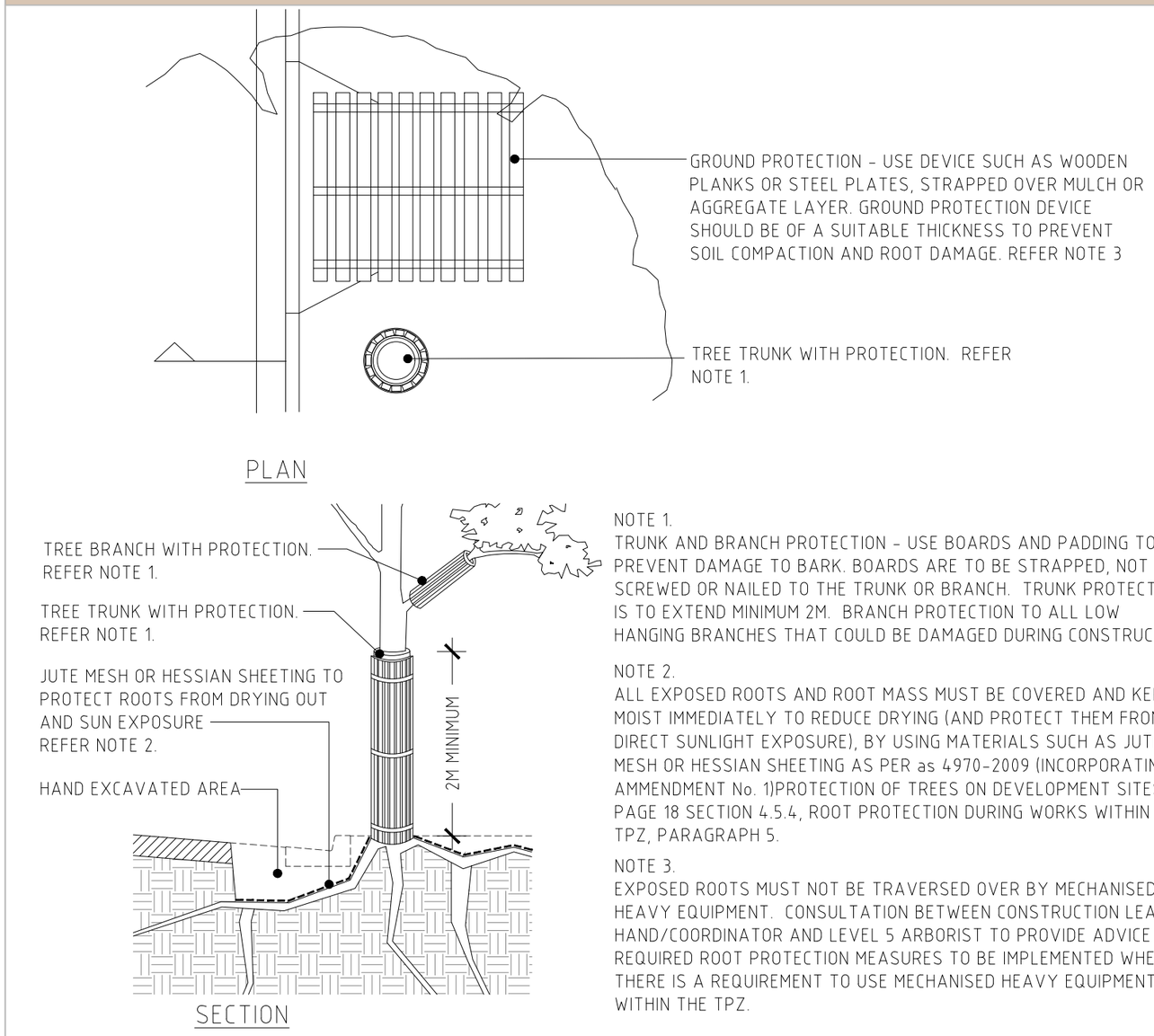

NOTE 1.
TRUNK AND BRANCH PROTECTION - USE BOARDS AND PADDING TO PREVENT DAMAGE TO BARK. BOARDS ARE TO BE STRAPPED, NOT SCREWED OR NAILED TO THE TRUNK OR BRANCH. TRUNK PROTECTION IS TO EXTEND MINIMUM 2M. BRANCH PROTECTION TO ALL LOW HANGING BRANCHES THAT COULD BE DAMAGED DURING CONSTRUCTION.

NOTE 2.
ALL EXPOSED ROOTS AND ROOT MASS MUST BE COVERED AND KEPT MOIST IMMEDIATELY TO REDUCE DRYING (AND PROTECT THEM FROM DIRECT SUNLIGHT EXPOSURE), BY USING MATERIALS SUCH AS JUTE MESH OR HESSIAN SHEETING AS PER as 4970-2009 (INCORPORATING AMMENDMENT No. 1)PROTECTION OF TREES ON DEVELOPMENT SITES, PAGE 18 SECTION 4.5.4, ROOT PROTECTION DURING WORKS WITHIN THE TPZ, PARAGRAPH 5.

NOTE 3.
EXPOSED ROOTS MUST NOT BE TRAVERSED OVER BY MECHANISED HEAVY EQUIPMENT. CONSULTATION BETWEEN CONSTRUCTION LEADING HAND/COORDINATOR AND LEVEL 5 ARBORIST TO PROVIDE ADVICE OF REQUIRED ROOT PROTECTION MEASURES TO BE IMPLEMENTED WHERE THERE IS A REQUIREMENT TO USE MECHANISED HEAVY EQUIPMENT WITHIN THE TPZ.

DETAIL B
TREE PROTECTION - TYPICAL TREE TRUNK, BRANCH AND ROOT DETAIL

ISSUE	DESCRIPTION	DRAWN	APPR'D	DATE
A	ISSUED FOR INFORMATION	N.D.R	A.G	12/19

DATUM AHD | SURVEYOR | AZIMUTH MGA | FIELD BOOK | RELATED PLANS | SCALE AS NOTED

DRAWN N. DAVIS-RAISS DATE 12/19
DESIGNED N. DAVIS-RAISS DATE 12/19
CHECKED A. GOLDIE DATE 12/19

APPROVED (FOR COUNCIL USE ONLY)
SENIOR LANDSCAPE ARCHITECT
A. GOLDIE
DATE 12/19

ISO 9001 Quality Management

NORTH POINT

CITY OF WOLLONGONG

TREES ON DEVELOPMENT SITES
TREE PROTECTION DETAILS
(SUBJECT TO SITE SPECIFIC ADVICE)

wollongong city of innovation
DESIGN & TECHNICAL SERVICES
Ph. 02 42277111

PJ or TR No. TR-452
SHEET OF SHEETS
DRAWING No. 7000
SHEET No. LD01
ISSUE A
A3 ORIGINAL

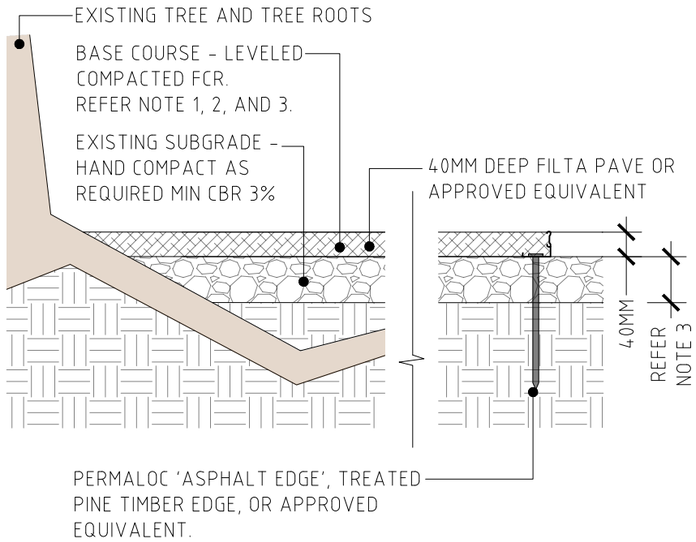

DETAIL A
FILTER PAVE FOOTPATH UNDER EXISTING TREES

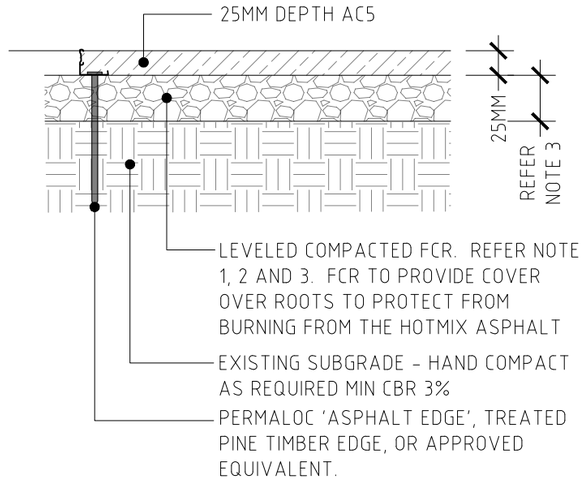

DETAIL B
ASPHALT FOOTPATH SURFACE
UNDER EXISTING TREES

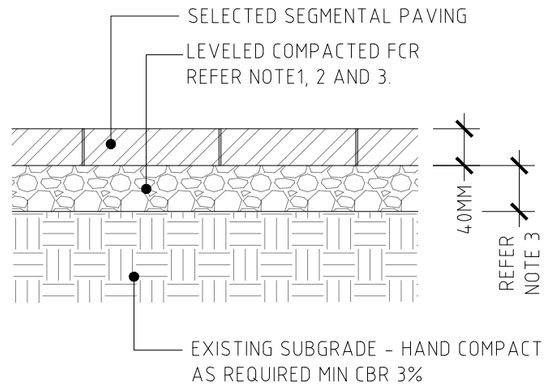

DETAIL C
SEGMENTAL PAVING FOOTPATH
UNDER EXISTING TREES

NOTE 1.
REMOVE EXISTING LEAF LITTER, TURF AND OTHER ORGANIC MATTER FROM UNDER TREES. EXCAVATE BY HAND AROUND TREE AND TREE ROOTS TO REQUIRED LEVELS, AS PER NOTE 2.

NOTE 2.
DEPTH TO BE DETERMINED ON SITE IN CONSULTATION WITH AN AQF5 ARBORIST AND DESIGNER. DEPTH MAY BE REDUCED OR OMITTED ALTOGETHER WHERE EXCAVATION WOULD RESULT IN ADVERSE IMPACT TO THE TREE ROOTS.

NOTE 3.
OPTION TO USE EXISTING BASE COURSE: CUT EXISTING BASE COURSE TO REQUIRED LEVELS. EXAMINE CAREFULLY AND COMPACT BASE COURSE (NOTE SERVICES). IF INSUFFICIENT STRENGTH REMOVE SOFT SPOTS AND PROVIDE COMPACTED FINE CRUSHED ROCK.

GENERAL NOTE
DETAILS ARE FOR NON TRAFFICABLE FOOTPATHS ONLY

DISCLAIMER
DESIGN AND TECHNICAL SERVICES (DTS) ARE PROVIDING TECHNICAL ASSISTANCE ONLY AND NOT PROJECT MANAGEMENT SERVICES. THE CLIENT ACCEPTS RESPONSIBILITY FOR PROJECT AND DESIGN MANAGEMENT.
THE CLIENT MUST ENSURE THAT THE PROJECT AND PROJECT RISK WILL BE MANAGED THROUGH WOLLONGONG COUNCIL'S PROJECT MANAGEMENT FRAMEWORK.
THE CLIENT ACKNOWLEDGES THAT THE INFORMATION PROVIDED BY DTS WILL ONLY ADDRESS THE SPECIFIC TECHNICAL ISSUES AND/OR PRELIMINARY INFORMATION REQUESTED. THIS INFORMATION IS NOT CONSIDERED SUFFICIENT TO ADDRESS ALL THE REQUIREMENTS AND APPROVALS OUTLINED IN PROJECT DELIVERY'S QUALITY MANAGEMENT SYSTEM (QMS).

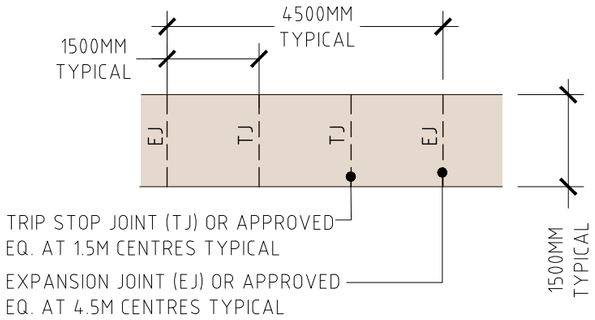

PLAN

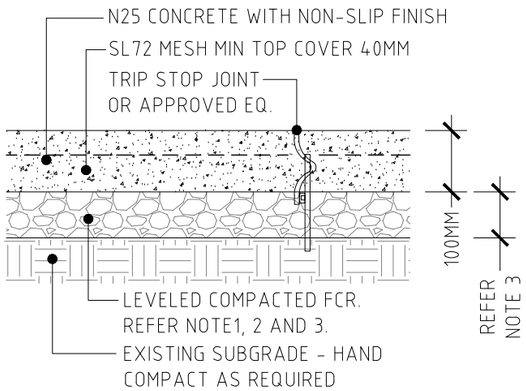

DETAIL SECTION

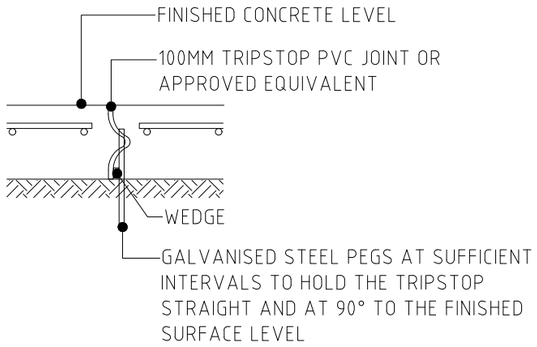

TRIP STOP JOINT TYPICAL DETAIL (TJ)

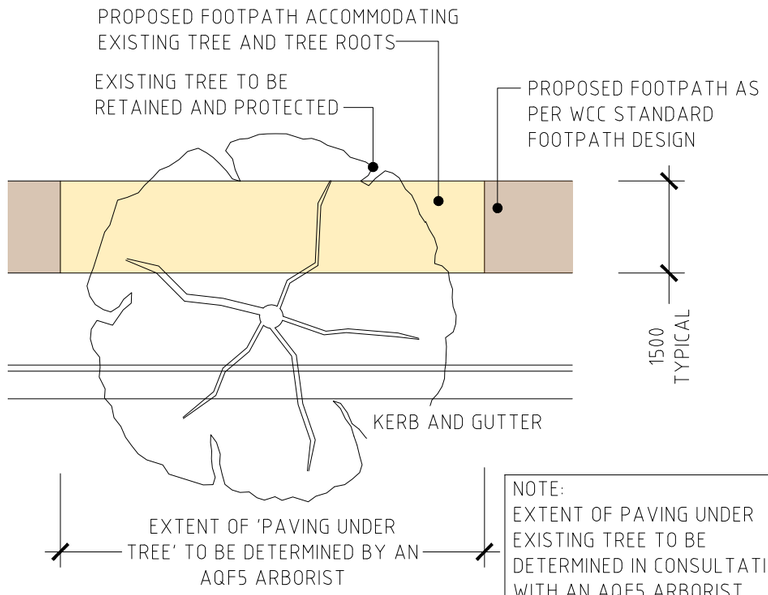

NOTE:
EXTENT OF PAVING UNDER EXISTING TREE TO BE DETERMINED IN CONSULTATION WITH AN AQF5 ARBORIST.

CONCEPT PLAN

NOTE !
LOCATION OF SERVICES TO BE CONFIRMED PRIOR TO COMMENCEMENT OF CONSTRUCTION
CONTACT "DIAL BEFORE YOU DIG" Phone 1100

www.dialbeforeyoudig.com.au
DIAL 1100 BEFORE YOU DIG

DETAIL D
ARTICULATED CONCRETE FOOTPATH WITH TRIP STOP JOINTS UNDER EXISTING TREES

ISSUE	DESCRIPTION	DRAWN	APPR'D	DATE
A	ISSUED FOR INFORMATION	N.D.R	A.G	12/19

DATUM AHD | SURVEYOR | AZIMUTH MGA | FIELD BOOK | RELATED PLANS | SCALE AS NOTED

DRAWN N. DAVIS-RAISS DATE 12/19
DESIGNED N. DAVIS-RAISS DATE 12/19
CHECKED A. GOLDIE DATE 12/19

APPROVED (FOR COUNCIL USE ONLY)
SENIOR LANDSCAPE ARCHITECT
A. GOLDIE
DATE 12/19

NORTH POINT

CITY OF WOLLONGONG
TREES ON DEVELOPMENT SITES
TREE PROTECTION DETAILS
(SUBJECT TO SITE SPECIFIC ADVICE)

wollongong city of innovation
DESIGN & TECHNICAL SERVICES Ph. 02 42277111

PJ or TR No. TR-452
SHEET OF SHEETS
DRAWING No. 7000
SHEET No. LD02
ISSUE A
A3 ORIGINAL